FLOORPUL®

Sapphire 85S

11/2013

EN

User and maintenance guide
(Translation of the original instructions)

Warning! Read the instructions before use.

GB

SUMMARY

LEGEND PANEL OF CONTROLS 18
LEGEND MACHINE 18
TECHNICAL DESCRIPTION 19
INTRODUCTORY COMMENT 20
GENERAL RULES OF SECURITY 20
SYMBOLOGY 20
OPTIONAL ACCESSORIES 21
BEFORE USE 21
- Handling of the packed machine 21
- Unpacking of the machine 21
- Access to the battery compartment 21
- Battery installation and setting of the battery type 21
- Assembling of the rollbar 21
- Battery recharger 22
- Batteries recharging 22
- Batteries disposal 22
- Connection batteries' connector and switching on of the machine 22
- Batteries charge level indicator 22
- Setting of the battery check card 22
- Hour meter 23
- Squeegee assembly 23
- Adjustment of the squeegee 23
- Adjustment height side rubbers 23
- Brushes assembly and disassembly 23

FLOOR CLEANING 24
- Recovery tank 24
- Detergent solution tank 24
- 3SD Solution Saving System Dispenser (optional) 24

STARTING OF THE MACHINE 24
- Forward and backward movement 25
- Horn 25
- Working brake 25
- Emergency-parking brake 25
- Automatism squeegee lifting when going backwards 25
- Working in automatic mode 25
- Working in manual mode 26
- Working adjustments 26
- Flow adjustment of the detergent solution 26
- Adjustment of the brushes pressure 26
- Electric protection 26
- Overflow device 26

STOP OF THE MACHINE AFTER CLEANING OPERATION 26
DAILY MAINTENANCE 27
- Recovery tank emptying and cleaning 27
- Emptying and cleaning of the collection box 27
- Suction filter cleaning 27
- Brushes cleaning 27
- Squeegee cleaning 27

WEEKLY MAINTENANCE 28
- Rear squeegee rubber check 28
- Squeegee “V” type (optional) 28
- Squeegee “V” type (optional): rear rubber replacement 28
- Check of the side rubbers 28
- Squeegee hose cleaning 28
- Cleaning of the solution tank and of the outer filter 28

TWO-MONTHLY MAINTENANCE 28
- Front squeegee rubber check 28
- Squeegee “V” type (optional): front rubber replacement 28

SIX-MONTHLY MAINTENANCE 29
- Cleaning of the inner filter solution tank 29
- Check of the brake 29

TROUBLESHOOTING GUIDE 29
- The suction motor does not work 29
- The brushes motor does not work 29
- The traction motor does not work 29
- The water does not come down onto the brushes or is insufficient 29
- The machine does not clean properly 29
- The squeegee does not dry perfectly 29
- Excessive foam production 29

PROGRAMMED MAINTENANCE 30
RECOMMENDED BRUSHES 30

GB

LEGEND PANEL OF CONTROLS

1. DISPLAY
2. SIGNAL LAMP MANUAL MODE ON
3. PUSH BUTTON CONNECTION MANUAL MODE
4. SIGNAL LAMP MODE BREAK WASHING ON
5. PUSH BUTTON CONNECTION MODE BREAK WASHING
6. PUSH BUTTON CONNECTION MODE AUTOMATIC
7. SIGNAL LAMP AUTOMATIC MODE ON
8. SIGNAL LAMP SUCTION MOTOR ON
9. SWITCH SUCTION MOTOR
10. ADJUSTMENT KNOB BRUSHES PRESSURE
11. PUSH BUTTON UP/DOWN SQUEEGEE
12. SIGNAL LAMP UP/DOWN SQUEEGEE
13. PUSH BUTTON VISUALIZATION HOUR METER (DISPLAY)
14. PUSH BUTTON VISUALIZATION BRUSHES PRESSURE SET (DISPLAY)
15. SIGNAL LAMP PARKING BRAKE ON
16. SIGNAL LAMP UP/DOWN BRUSHES
17. PUSH BUTTON UP/DOWN BRUSHES
18. SIGNAL LAMP STARTING BRUSHES ROTATION
19. PUSH BUTTON WATER OPENING (SOLENOID VALVE) or PUSH BUTTON ADJUSTMENT DETERGENT DOSAGE 3SD system (OPTIONAL)
20. SIGNAL LAMP WATER OPEN (SOLENOID VALVE)
21. PUSH BUTTON FOR SPEED SELECTION
22. SIGNAL LAMP SELECTION MAXIMUM SPEED
23. SIGNAL LAMP SELECTION SLOW SPEED
24. KEY SWITCH MACHINE ON
25. SWITCH FOR FRONT LIGHT (OPTIONAL)
26. PUSH BUTTON HORN
27. KNOB FOR SOLUTION VALVE
28. SELECTOR DIRECTION OF DRIVE

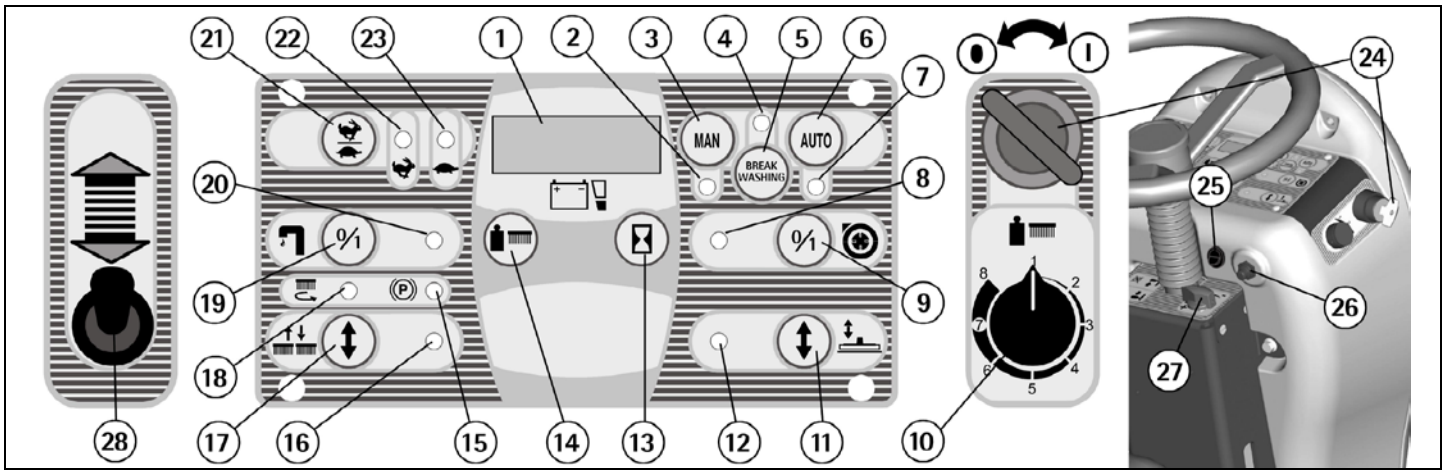

LEGEND MACHINE

1. RECOVERY TANK
2. SOLUTION TANK
3. SEAT
4. DRIVE WHEEL
5. SCREW CAP FOR INLET DETERGENT SOLUTION
6. BLINKING LIGHT
7. ROLLBAR
8. SUCTION HOSE
9. SUCTION COVER
10. SQUEEGEE HOSE
11. BLOCKING LEVERS SUCTION COVER
12. PLUG EXHAUST HOSE RECOVERY TANK
13. EXHAUST HOSE RECOVERY TANK
14. SQUEEGEE ASSEMBLY
15. PANEL CONTROLS
16. LEVER BLOCK/RELEASE PARKING BRAKE
17. COVER ELECTRICAL LAYOUT
18. BRAKE PEDAL
19. BUMPER
20. PEDAL ACCELERATOR
21. OUTER FILTER DETERGENT SOLUTION
22. STEERING WHEEL
23. BOTTOM PLATE
24. BRUSHES BASE GROUP
25. TRACTION WHEELS

GB

TECHNICAL DESCRIPTION	U/M	sapphire 70s	sapphire 85s
Cleaning width	mm	700	850
Squeegee width	mm	1000	1170
Working capacity, up to	sqm/h	4270	5200
Diameter cylindrical brushes	mm	2 x 150	2 x 150
Cylindrical brushes rpm	rpm	785	785
Brushes motor	W	2x650	2x650
Traction motor	W	600	600
Suction motor	W	570	570
Suction vacuum	mbar	190	190
Type of drive		autom.	autom.
Movement speed	km/h	6,1	6,1
Maximum gradient	%	10	10
Solution tank	l	110	110
Recovery tank	l	120	120
Machine length	mm	1660	1660
Machine height (without rollbar)	mm	1285	1285
Machine height (with rollbar and blinking light))	mm	1690	1690
Machine width (without squeegee)	mm	780	920
Weight of the machine (empty and without batteries)	kg	330	335
Capacity of the batteries	Ah_5	240	240
Weight of the batteries	kg	300	300
Compartment of the batteries	mm	380x840x395	380x840x395
Acoustic pressure level (in conformity with EN 60704-1)	dB (A)	< 70	< 70
Vibration level right hand	m/s^2	<2,50	<2,50
Vibration level left hand	m/s^2	<2,50	<2,50
Vibration level whole body	m/s^2	<0,50	<0,50
Class		III	III
Protection level	IP	23	23
Tension	V	36	36

GB

INTRODUCTORY COMMENT

Thank you for having chosen our machine. This floor cleaning machine is used for the industrial and civil cleaning and is able to clean any type of floor. During its advance movement, the combined action of the brushes and the detergent solution removes the dirt which is aspirated through the rear suction assembly, giving a perfectly dry surface.
The machine must be used only for such purpose. It gives the best performance if it is used correctly and maintained in perfect efficiency. We therefore ask you to read this instruction booklet carefully whenever difficulties arise in the course of the machine's use. In case of need, we ask you to contact our service department for all advice and servicing as may prove necessary.

GENERAL RULES OF SECURITY

The rules below have to be followed carefully in order to avoid damages to the operator and to the machine.
- Read the labels carefully on the machine. Do not cover them for any reason and replace them immediately if damaged.
- The machine must be used exclusively by authorized staff that has been instructed for its use.
- During the working of the machine, pay attention to other people and especially to the children.
- In case of danger act immediately upon the emergency brake.
- Leaving the machine in parking position, take off the key and act upon the parking brake.
- Do not mix different detergents, avoiding harmful odours.
- Do not place any liquid containers onto the machine.
- Storage temperature: between -25°C and +55°C.
- Perfect operating temperature: between 0°C and 40°C.
- The humidity should be between 30 and 95%.
- Do not use the machine in explosive atmosphere.
- Do not use the machine as a means of transport.
- Do not use acid solutions which could damage the machine and/or the persons.
- Do not use the machine on surfaces covered with inflammable liquids or dusts (for example hydrocarbons, ashes or soot).
- In case of fire, use a powder fire-extinguisher.
Do not use water.
- Do not strike shelvings or scaffoldings, where there is danger of falling objects.
- Adapt the working speed to the adhesion conditions: particularly, slow down before narrow curves have to be faced.
- Do not use the machine on areas having a higher gradient than the one stated on the number plate.
- The machine has to carry out simultaneously the operations of washing and drying. Different operations must be carried out in restricted areas prohibited to non-authorized personnel. Signal the areas of moist floors with suitable signs.
- If the machine does not work properly, check by conducting simple maintenance procedures. Otherwise, ask for technical advice an authorized assistance centre.
- Where parts are required, ask for ORIGINAL spare parts to an authorized dealer.
- Use only ORIGINAL brushes indicated in the paragraph "RECOMMENDED BRUSHES".
- For any cleaning and/or maintenance operation take off the power supply from the machine.
- Do not take off the protections which require the use of tools to be removed.
- Do not wash the machine with direct water jets or with high water pressure nor with corrosive material.
- Every 200 working hours have a machine check through an authorized service department.
- In order to avoid scales on the solution tank filter, do not fill the detergent solution many hours before the machines' use.
- Before using the machine, check that all panels and coverings are in their position as indicated in this use and maintenance catalogue.
- Make sure that the recovery tank is empty before rotating it.
- Restore all electrical connections after any maintenance operation.
- Provide for the scrapping of the material of normal wear following strictly the respective rules.
- When, your machine has to stop activity, provide for the appropriate waste disposal of its materials, especially oils, batteries and electronic components, and considering that the machine itself has, where possible, been constructed using recyclable materials.

SYMBOLOGY

Symbol denoting the switch for the water opening and the signal lamp that the water is open.

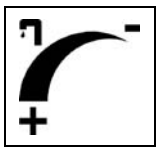
Symbol denoting the functioning of the solution valve adjusting the flow of the detergent solution.

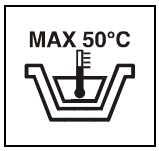

Indication of the maximum temperature of the detergent solution. It is placed near the charging hole of the solution tank.

Symbol denoting the selection switch of the operation mode manual/automatic.

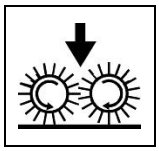
Symbol denoting the push button and the signal lamp up/down brushes.

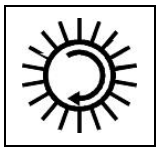
Symbol denoting the signal lamp of the starting of the brushes rotation.

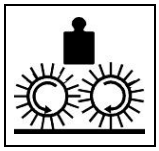
Symbol denoting the push button to visualize on the display the brushes pressure set.

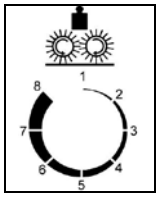

Symbol denoting the functioning of the adjustment knob of the brushes pressure.

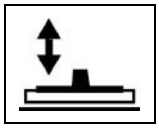
Symbol denoting the push button and the signal lamp up/down of the squeegee.

Symbol denoting the switch of the suction motor.

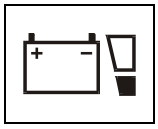
Symbol denoting the charge level of the batteries.

Symbol denoting the push button to visualize the hour meter on the display.

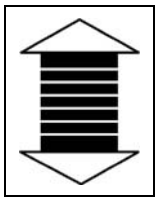
Symbol denoting the drive selector forwards/backwards.

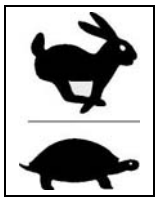
Symbol denoting the selection switch of the operation speed.

Symbol denoting the signal lamp of the parking brake switched on.

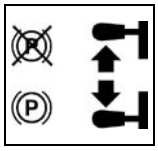
Symbol denoting the lever position for the connection of the parking brake.

Symbol denoting the open book.
Indicates that the operator has to read the manual before the use of the machine.

Warning symbol.
Read carefully the sections marked with this symbol, for the security of both the operator and the machine.

GB

OPTIONAL ACCESSORIES

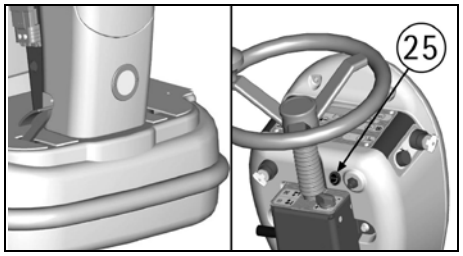

Front light and relative switch.

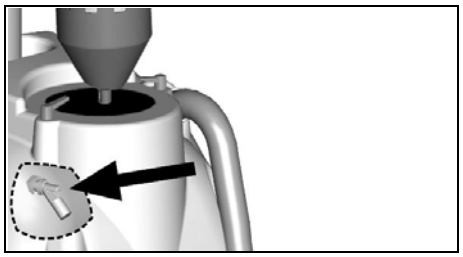

Electric float switch.

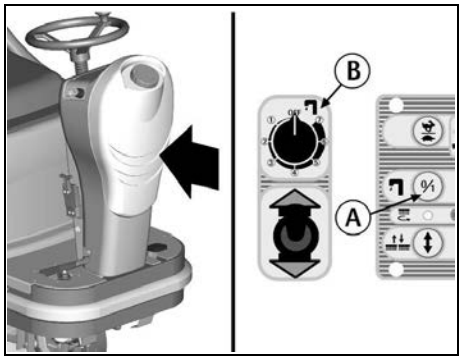

3SD "SOLUTION SAVING SYSTEM DISPENSER".

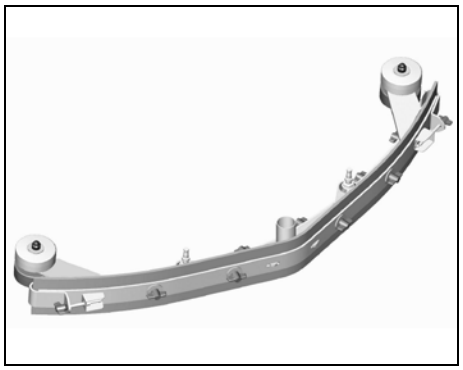

Squeegee "V"-type.

BEFORE USE

HANDLING OF THE PACKED MACHINE

The machine is supplied with suitable packing foreseen for fork lift truck handling.
The total weight is 355kg.
Packing dimensions:
Base: 178 cm x 93 cm
Height: 138 cm

ATTENTION:
Do not place more than 2 packings on top of each other.

UNPACKING OF THE MACHINE

1. Remove the external packing.
2. Unscrew the brackets (1+2) that secure the machine to the pallet.

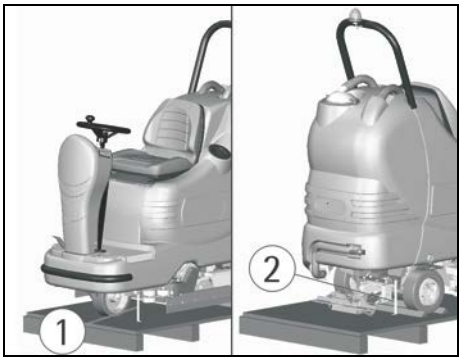

3. Move the machine backwards, as indicated in the figure, avoiding heavy contacts to mechanical parts.

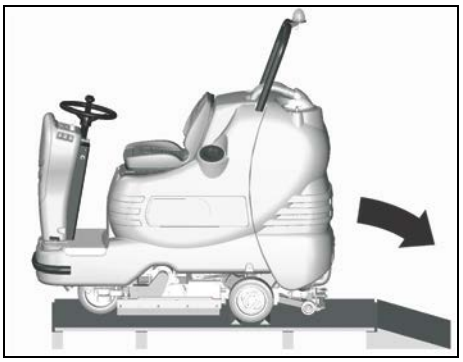

4. Keep the pallet and the brackets for eventual transport.

ACCESS TO THE BATTERY COMPARTMENT

1. Bring the machine on a levelled surface.
2. Rotate the seat platform forward up to the blocking of the support.
3. Make sure that the recovery tank is empty, otherwise proceed to its emptying (see under paragraph "RECOVERY TANK EMPTYING AND CLEANING").
4. Rotate the recovery tank backwards until the safety cables are put in tension.
5. Having finished any intervention, to close the battery compartment, reposition first the recovery tank, then, after having released the support, reposition the seat platform being careful that it is going to block the tank engaging the slot placed on the rear part of the tank to the seat.

BATTERY INSTALLATION AND SETTING OF THE BATTERY TYPE

The machine is equipped either with batteries in serial connection or elements of DIN-type assembled together and connected in series for a total of 36 Volt, placed in its appropriate compartment under the seat platform and must be handled using suitable lifting equipment (due to weight, considering the type of batteries chosen, and coupling system).
The batteries must be in accordance with CEI 21-5 Norms.

ATTENTION:
The machine and its battery check card foresee the use of traditional lead or gel batteries.
CHECK THE CORRECT SETTING OF THE CHECK CARD (see under paragraph "BATTERIES CHARGE LEVEL INDICATOR" and "SETTING OF THE BATTERY CHECK CARD").

ATTENTION:
Strictly follow manufacturer/distributor indications for the maintenance and recharge of the batteries. All installation and maintenance operations must be executed by specialized staff, using suitable protection accessories.

For batteries installation it is necessary to reach the battery compartment as indicated under paragraph "ACCESS TO THE BATTERY COMPARTMENT".
1. Place the batteries in its compartment.
2. Connect the terminals, respecting the polarities, avoiding contact with other parts that could create short circuit.

ASSEMBLING OF THE ROLLBAR

For packing reasons the support of the blinking light is supplied disassembled.
In each seat on the solution tank there are two screws. On the lower screw there is fixed the safety cable (1) to prevent the overturn of the recovery tank when this is being opened.
Proceed as follows:
1. Take off the two screws (2) from the seats on the tank.
2. Place the rollbar in its position so that the side where the cable of the blinking light comes out corresponds to the side of the machine where there is the connecting plug on the suction motor support of the recovery tank.
3. Fasten the screws passing them in the same order in their holes foreseen on the rollbar.
4. Complete the assembly connecting the connectors (3) to supply the blinking light.
Afterwards, to remove the batteries from the machine, it is sufficient to take off only the upper screws (where the cable is not fixed) from their seats and rotate the rollbar backwards.

GB

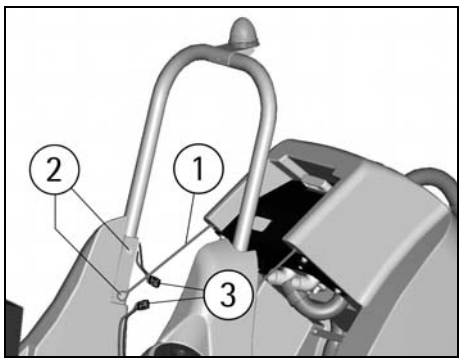

BATTERY RECHARGER
Make sure that the battery recharger is suitable for the installed batteries both for their capacities and type (lead/acid or GEL).

In the plastic bag containing the use and maintenance you will find the coupling connector for the recharger. It must be assembled onto the cables of your recharger, following the instructions given by the manufacturer.

⚠ **ATTENTION:**
This operation must be carried out by qualified staff. A wrong or faulty cable connection can cause serious damages to persons or things.

BATTERIES RECHARGING
1. Plug the connector (3) of the battery recharger into the battery connector (1).
2. Proceed for the recharging.

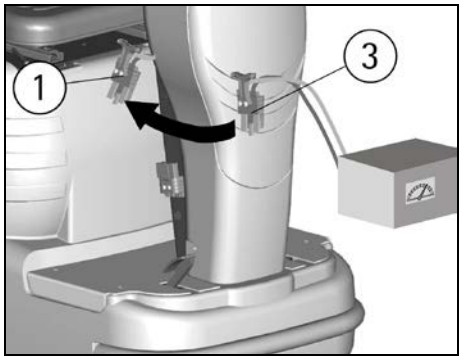

⚠ **ATTENTION:**
Never charge a GEL battery with a non suitable recharger. Strictly follow the instructions supplied by the batteries and recharger manufacturer.
In order not to cause permanent damages to the batteries, it is necessary to avoid their complete discharge, providing for the recharging within a few minutes after that the batteries discharge signal starts blinking.
NOTE: Never leave the batteries completely discharged even if the machine is not used. In case of traditional batteries, please check the electrolyte level every 20 recharging cycles and eventually top them up with distilled water. Never leave the batteries discharged for more than two weeks.

⚠ **ATTENTION:**
For the recharge of the batteries it is necessary to follow strictly all the indications given by the manufacturer/distributor. All the installation and maintenance operations must be carried out by qualified staff. **Danger of gas exhalations and emission of corrosive liquids. Fire danger: do not approach with free flames.**

BATTERIES DISPOSAL
It is compulsory to hand over exhausted batteries, classified as dangerous waste, to an authorized institution according to the current laws.

CONNECTION BATTERIES' CONNECTOR AND SWITCHING ON OF THE MACHINE
Once that the battery recharging has been completed:
1. Disconnect the connector of the battery recharger from the battery connector (1).
2. Connect then the battery connector (1) to the machine connector (2).
To start any function of the machine, it is necessary to rotate clockwise the key switch. Rotating it counterclockwise any function will be switched off (see pos. 24 in "LEGEND PANEL OF CONTROLS").

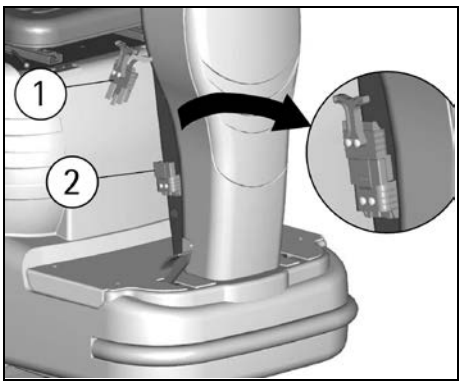

BATTERIES CHARGE LEVEL INDICATOR
To start any function of the machine, it is necessary to rotate clockwise the key switch (24). Rotating it counterclockwise any function will be switched off.

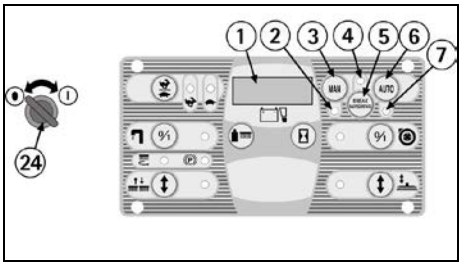

WHEN THE MACHINE IS SWITCHED ON, ON THE DISPLAY (1) APPEAR IN ORDER THE FOLLOWING INFORMATION:
1. model of the machine (for example AdS).

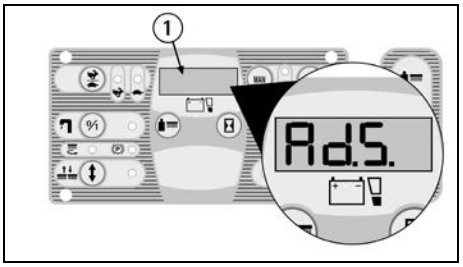

2. the indication of the setting of the battery check card which can be:
GE 36 (check card set for GEL batteries).
or
Pb 36 (check card set for lead batteries).

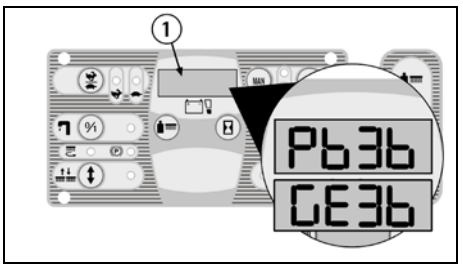

3. the version of software of the check card installed on the machine (for example 4-6).

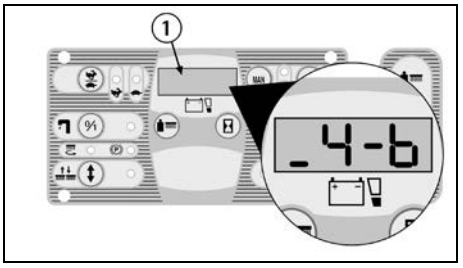

4. The batteries charge level indicator is digital and remains fixed on the display. The battery charge level starts from -100-, which indicates the 100% of the total charge and decreases from 10 to 10. When the charge level reaches the value -20-, the display starts blinking, so you are about the end of working.

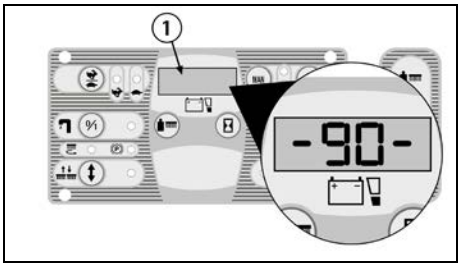

⚠ **ATTENTION:**
After a few seconds of the indication -10- blinking, automatically the brushes function is stopped, while the suction continues to work. On visualization of the four blinking lines, also the suction will stop automatically. The traction instead will function, so to transfer the machine to the suitable place for tank draining and battery recharging.

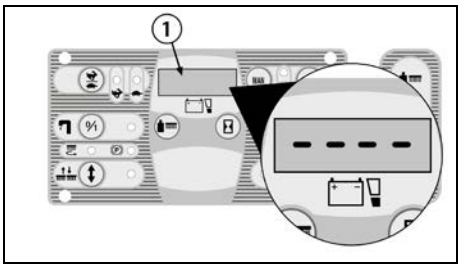

SETTING OF THE BATTERY CHECK CARD
The setting of the battery check card can be:
GE 36 (check card set for GEL batteries).
or
Pb 36 (check card set for lead batteries).
The machine, if not specified otherwise, is supplied with the battery check card set for lead batteries. To modify this setting, it is necessary to:
1. Switch off and on the machine.
2. Immediately after having switched on, when on the display (1) the writing Pb36 appears, press simultaneously the push buttons (3) and (6) up to the blinking of the writing.

GB

3. When the writing begins to blink, take off the fingers from the push buttons and press once the push button (6).
4. The writing GE36 appears blinking.
5. When the writing stops to blink, the setting is modified.
For the passage of the setting from gel batteries into lead batteries, repeat the procedure pressing button (3) instead of button (6).

ATTENTION:
As the machine is 36V version, do not set the batteries at 24V.

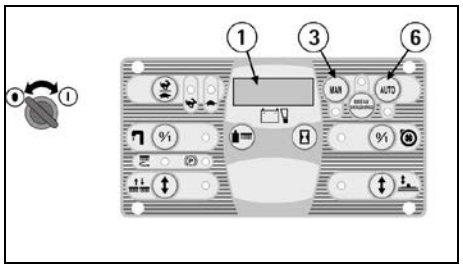

HOUR METER
The machine is equipped with an hour meter located on the same display (1) of the battery charge level indicator. Keeping the button (13) pressed, the first data indicates the working hours and after a few seconds the working minutes are shown.

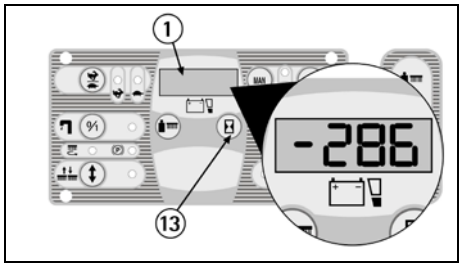

SQUEEGEE ASSEMBLY
1. Maintain the squeegee support (1) slightly lifted from the floor.
2. Insert the threaded parts of the two knobs (4) making them slide inside the two slots on the support placed on the upper part of the squeegee (2).
3. Place the washers (3), they are two for each knob, so that they are assembled one under and the other on each of the two slots present on the support.
4. Block the squeegee by rotating the two knobs (4) clockwise.
5. Insert the squeegee hose (5) into its coupling, respecting its position as indicated in the figure.

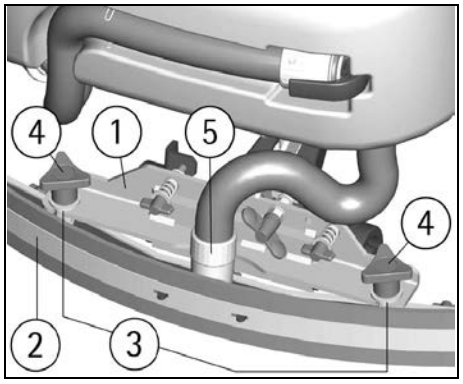

ADJUSTMENT OF THE SQUEEGEE
In order to have a perfect drying result through the squeegee, the rear rubber must have the lower bending uniformly adjusted in all its length. For the adjustment, it is necessary to put oneself in working condition and therefore the suction motor has to be switched on and the brushes have to function together with the detergent solution.

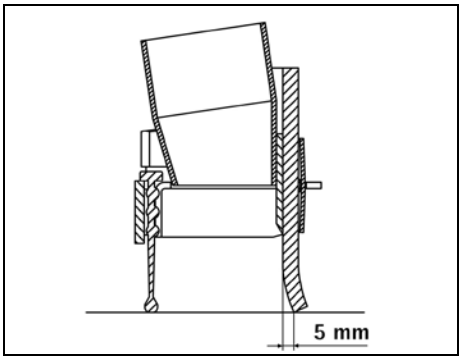

The lower part of the rubber is too much bent
Take off the pressure rotating the wing nut (6) counterclockwise.
The lower part of the rubber is not much bent
Increase the pressure rotating the wing nut (6) clockwise. Check that the wheels which adjust the height do not rest on the floor, in this case adjust them as indicated in paragraph "Height adjustment".
The bending is not uniform
Adjust the squeegee inclination rotating counterclockwise the wing nut (7) to increase the bending in the central part, or clockwise to increase the bending on the extremities.
Height adjustment
Once that the pressure and inclination of the squeegee have been adjusted, it is necessary to fix this optimum condition making touch slightly the wheels onto the floor. Rotate clockwise the registers (8) to lower the wheels or counterclockwise to raise them. Both wheels must be adjusted in the same measure.

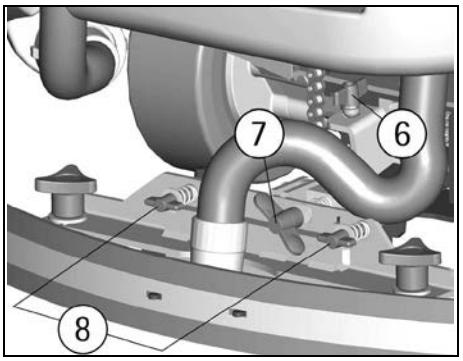

ATTENTION:
Every type of floor requires a specific adjustment. For example, concrete floors (where the friction results to be high) need little pressure, while smooth floors (ceramics) need higher pressure.
If the cleaning operations are made always on the same type of floor, the adjustment can change only in function of the rubber wear.

ADJUSTMENT HEIGHT SIDE RUBBERS
To adjust the side rubbers, it is necessary to act upon the adjusting screws (1) and (2) after having loosened the upper blocking nuts. Unscrewing, the rubber lowers, while screwing down, the rubber is lifted. The reason of the adjustment is to obtain an uniform bending.
Having finished the adjustment, tighten the blocking nuts to fix the position.

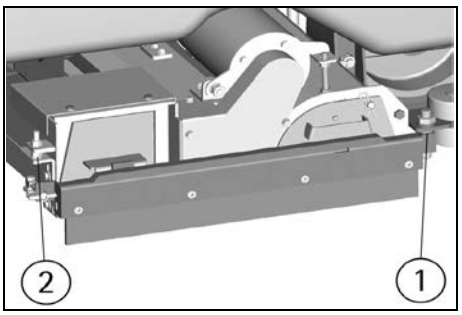

BRUSHES ASSEMBLY AND DISASSEMBLY
Normally, the machine is delivered with the brushes assembled.
To assemble and disassemble the brushes on both sides of the machine:
1. Position the selector (10) for the adjustment of the brushes pressure on position P1.
2. Activate the machine (see under paragraph "STARTING OF THE MACHINE") positioning the selector (3) to the right to choose the manual mode (MAN).
3. Activate the push button (17) of up/down of the brushes base to lower the brushes. Once that it is lowered, the brushes begin to turn.
4. Turn the key counterclockwise to turn off the machine.

ATTENTION:
To carry out brushes assembly operations with the electric supply on, may cause damages to hands.

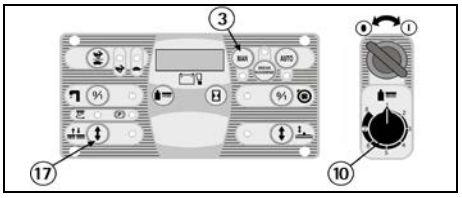

ATTENTION:
This operation must be carried out using gloves to protect from contact with dangerous solutions.

5. Unblock the bar of the side rubber after having released the knob (1).

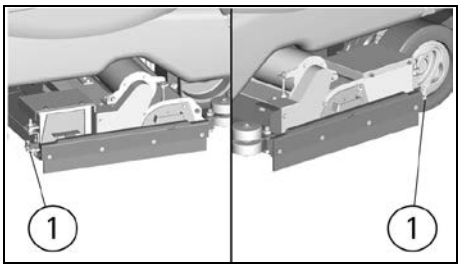

6. Open the bar of the side rubber (2) as shown in the figure.

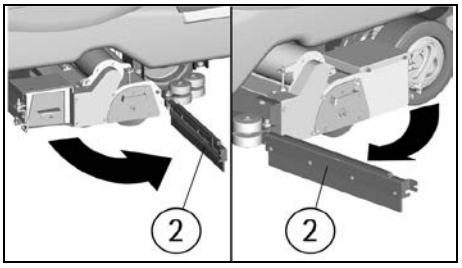

7. Extract the support plate (3) of the brushes pulling it outwards by holding its handle.

GB

8. Extract the brush (4).

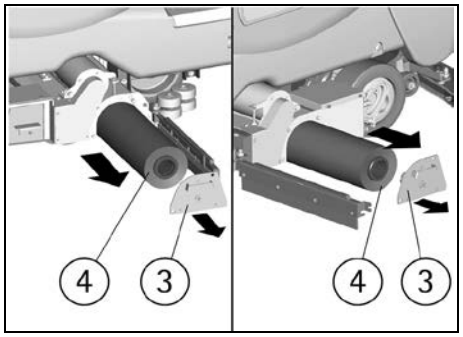

9. During the reassembly of the brush (4), insert it into the brush base from the part where the seat is deeper (about 40mm). The opposite part with a depth of about 13,5mm has to look towards the support plate.

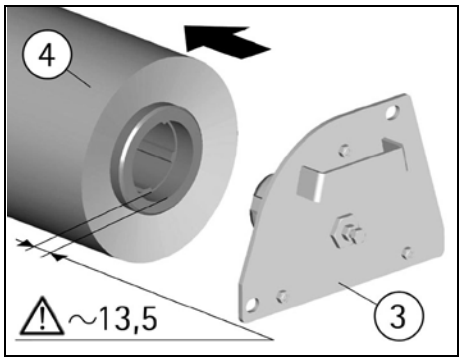

10. Place the support plate (3) into its position, then put back the bar of the side rubber (2) blocking it with the knob (1).

ATTENTION:
The brushes must be inserted easily without using tools in order not to damage or force them.
Use only brushes supplied with the machine or the ones indicated in the paragraph "RECOMMENDED BRUSHES". The use of other brushes can compromise the good washing result.

FLOOR CLEANING

RECOVERY TANK
Check that the cover of the suction filter (1) is correctly secured, after rotating the levers (2) and that the suction motor hose (3) is correctly connected to it.
Verify also that the squeegee hose couplings (4/5) are correctly inserted into their seats and that the exhaust hose plug (6) placed in the rear low part of the machine is well closed.

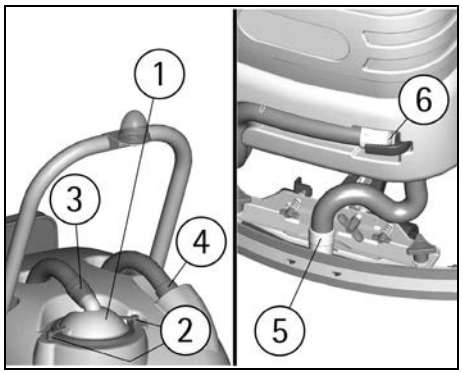

DETERGENT SOLUTION TANK
The capacity of the detergent solution tank is indicated in the technical data.
Open the screw plug placed in the left part of the machine and fill the detergent solution tank with clean water at a maximum temperature of 50°C. Add the liquid detergent in the percentage and conditions foreseen by the manufacturer. To avoid excessive foam presence, which could cause problems to the suction motor, use the minimum percentage of detergent. Screw down the plug to close the tank.

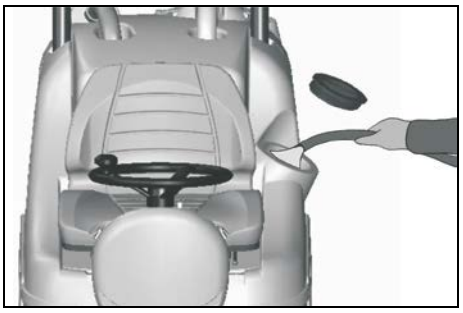

ATTENTION:
Use always low foam detergent. To avoid foam presence, before starting working operation, introduce into the recovery tank a minimum quantity of anti-foam product.
Never use pure acid.

3SD SOLUTION SAVING SYSTEM DISPENSER (OPTIONAL)
The system permits the predetermined dosing of the detergent percentage which will be mixed with the water of the solution tank.
The detergent is contained in a transparent tank with a capacity of 8 litres, placed in the front part of the machine.

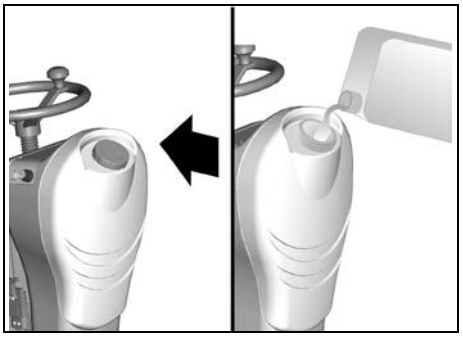

With the brushes moving, pressing once the push button (A) on the instrument board, on the display (1) the indication shows the detergent percentage which is being used.
Pressing the same push button in succession, six different possibilities of setting can be selected and the display (1) visualizes always the percentage.
The indication of the level corresponds to the following detergent percentages in the water:
d 0.0
d 0.3
d 0.6
d 1.2
d 2.4
d 4.5

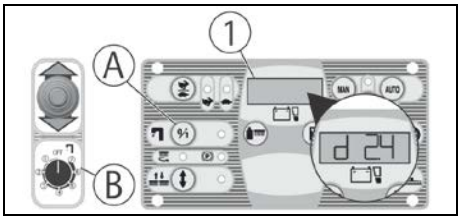

The dosing adjustment set remains stored by the system also with the machine stopped.
The water flow is adjusted through the 8-way commutator (B): one OFF position and 7 operating positions from a minimum of 1 litre/min to a maximum of 4 litres/min.
In OFF position both the water flow and its relative detergent flow is interrupted.

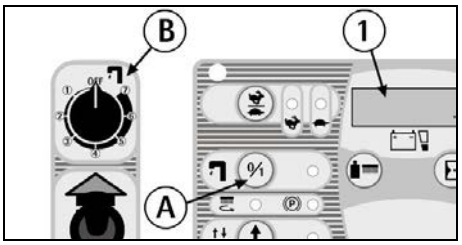

When the commutator (B) is in OFF position, an auxiliary water system can be activated, that permits the traditional use of the machine and therefore the filling of the solution tank with water and detergent without using the system and therefore without the use of the pumps. In this case it is necessary to open and adjust manually a solution valve (C) placed under the machine. In this situation the push button (A) handles the command of the solenoid valve in manual function.
NOTE: when restarting with the work in mode 3SD, it is important that the solution valve (C) is closed, this to maintain the predetermined proportions water-detergent.
NOTE: if the automatic dosing system is not being used for a long time, it is possible that the hoses of the detergent circuit are emptied and therefore at the first use, the detergent begins to come out onto the brushes with a certain delay compared to the water outlet.
Through the solution valve (D) it is possible to empty the detergent tank and to recover the detergent.

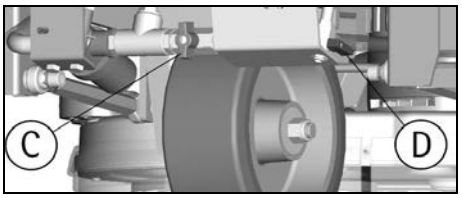

STARTING OF THE MACHINE

A safety device avoids the machine's movement if the operator is not seated correctly on the guiding place.
To switch on the machine:
1. Sit on the guiding place.
2. Turn the key switch (24) clockwise to switch on the machine. Automatically, the machine gets ready in manual (MAN) mode and in forward movement with the quick speed (signal lamp 22).
3. Check the charge level of the batteries on the display (1).
4. Pressing the push button (5) the functioning of BREAK WASHING is chosen and the transfer operations of the machine are carried out (see under paragraph "FORWARD AND BACKWARD MOVEMENT"). When the signal lamp (4) is on, then the machine is in BREAK WASHING mode.

5. Pressing the push button (6) the automatic (AUTO) functioning is chosen, while pressing the push button (3), the functioning of the machine becomes manual (MAN).
A. When the signal lamp (7) is on, the machine is functioning in automatic (AUTO) model and the machine activates and deactivates all the working functions in an automatic mode (see under paragraph "WORKING IN AUTOMATIC MODE").
B. When the signal lamp (2) is on, the machine is functioning in manual (MAN) mode and it is possible to choose if:

I. to carry out the only transfer of the machine without activating or deactivating the working functions.
II. to activate separately only the controls relative to the washing function with the brushes (see under paragraph "WORKING IN MANUAL MODE").
III. to activate separately only the controls relative to the drying function with the squeegee (see under paragraph "WORKING IN MANUAL MODE").

ATTENTION:
In manual mode every function of the machine has to be activated or deactivated manually.

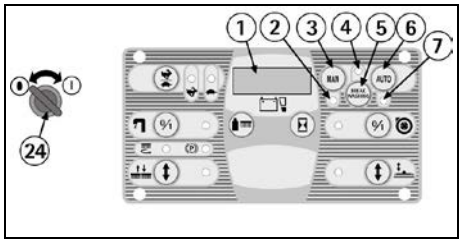

FORWARD AND BACKWARD MOVEMENT
It is recommended to carry out always the mere transfer of the machine in mode (BREAK WASHING).
To proceed to activate the movement of the machine:
1. Sit on the guiding place.
2. Turn the key switch (24) clockwise to switch on the machine.
3. Check the charge level of the batteries on the display (1).
4. Pressing the push button (5) the functioning of BREAK WASHING is chosen to carry out the mere transfer of the machine. In fact, in this mode the washing functions of the machine are not working and only the traction system functions. When the signal lamp (4) is on, then the machine is in BREAK WASHING mode.
5. Check through the signal lamp (15) that the parking brake is not inserted and eventually release it (see under paragraph EMERGENCY-PARKING BRAKE").
6. Positioning the selector (28) forward, the forward drive is chosen, while positioning it back, the rear drive is chosen.
7. Press the accelerator pedal placed on the right part of the platform to start the machine.
8. Adjust the movement speed in forward pressing every time the push button (21) to choose the slow one (at the maximum 3,6 km/h is reached) or the fast one (at the maximum 6,1 km/h is reached). The signal lamp (22) indicates that the fast drive is selected, while signal lamp (23) indicates that the slow drive is selected.
9. In backward movement, when the machine is moving, an intermittent warning device is activated.

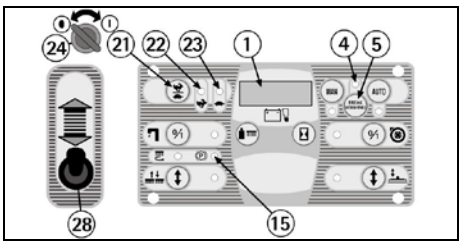

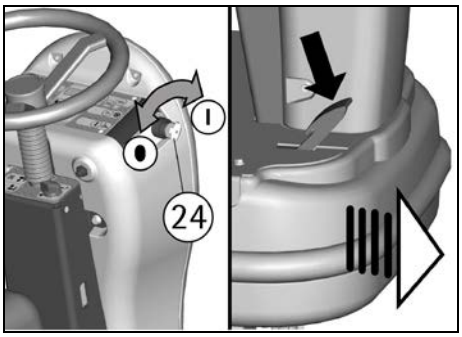

HORN
The machine is equipped with a horn which is activated pressing the push button (1).

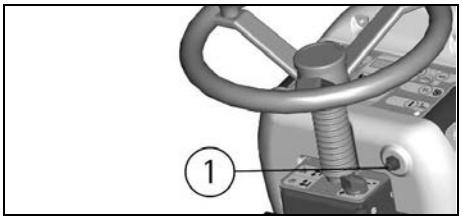

WORKING BRAKE
To stop the machine during normal working situations, it is sufficient to release the accelerator pedal, because the machine has got an electronic brake system. To restart, press again the accelerator pedal.

EMERGENCY-PARKING BRAKE
In case of an emergency press the pedal of the emergency and parking brake (1) placed on the left side.
To insert the parking brake press the brake pedal (1) and simultaneously move downwards the lever (2) placed on the left side of the steering column.
On the instrument board the signal lamp (15) comes on which signals that the parking brake is inserted.
To release the parking brake it is sufficient to press the brake pedal (1) and automatically it is released.

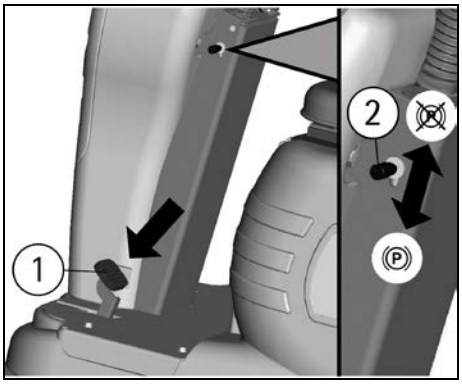

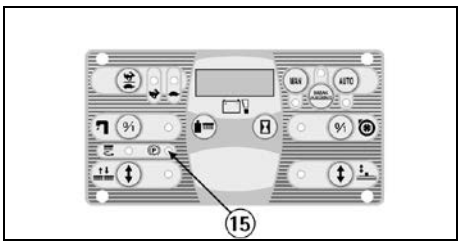

AUTOMATISM SQUEEGEE LIFTING WHEN GOING BACKWARDS
Selecting the backwards movement the squeegee is brought automatically to the upper position. It will then lower again in the following forward movement.
This happens both in automatic as in manual mode in order to protect the integrity of the squeegee.

WORKING IN AUTOMATIC MODE
The automatic operation is useful to simplify the operator's work.
1. Activate the machine (see under paragraph "STARTING OF THE MACHINE").
2. Pressing the push button (6) the automatic (AUTO) functioning is chosen. When the signal lamp (7) is on, then the machine is functioning in automatic (AUTO) mode.
3. Check that the knob of the solution valve (27) is in the position of optimum flow, depending on the type of floor and the type of dirt (see under the paragraph "FLOW ADJUSTMENT OF THE DETERGENT SOLUTION").
4. Position the selector (28) forward to choose the forward drive.
5. Adjust the movement speed in forward with the push button (21) (see under paragraph "FORWARD AND BACKWARD MOVEMENT").
6. Pressing the accelerator pedal, the machine begins to proceed and in automatic mode all the working functions are activated. In fact, automatically both the brushes base and the squeegee go down, the brushes begin to turn, the solenoid valve opens to permit the detergent solution to flow down onto the brushes and the suction system is activated to recover the dirty water from the floor.
Positioning backwards the selector (28) to choose the rear drive and pressing the accelerator pedal the rear drive starts, the squeegee lifts automatically and will then return to lower itself during the next forward movement.
If the accelerator pedal is released for more than 3 seconds, automatically all the functions are being switched off and both the brushes base and the squeegee are being lifted.
Pressing again the pedal, the machine starts to move again and in automatic mode all the working functions are reactivated.

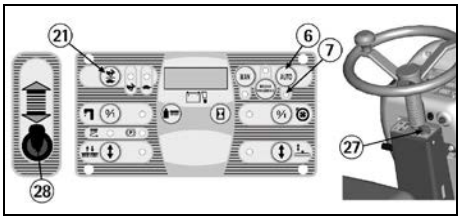

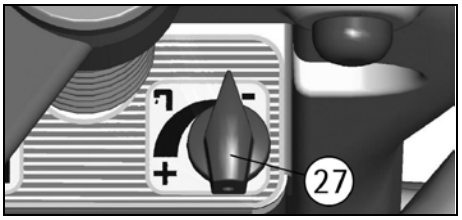

GB

WORKING IN MANUAL MODE
The manual model is useful when, in special cases, it is necessary to carry out separately only the washing with the brushes or only the drying of the floor.

ATTENTION:
The washing and drying functions, when they are not carried out simultaneously, represent an improper use of the machine (see under paragraph "GENERAL RULES OF SECURITY"). If they are carried out separately, it is necessary to forbid the working areas to the passage of non-authorized personnel and to signal the areas of moist floors with suitable signs.

1. Activate the machine (see under paragraph "STARTING OF THE MACHINE").
2. Pressing the push button (3) the functioning of manual (MAN) mode is chosen. When the signal lamp (2) is on, then the machine is functioning in manual (MAN) mode.

TO CARRY OUT THE WASHING WITH ONLY THE BRUSHES:
1. Check that the knob of the solution valve (27) is in the position of optimum flow, depending on the type of floor and the type of dirt (see under the paragraph "FLOW ADJUSTMENT OF THE DETERGENT SOLUTION").
2. Press the push button (17) of up/down of the brushes base to lower the brushes. Once that it is lowered, the brushes begin to turn. The blinking signal lamp (16) indicates that the brushes base is lowering or raising (the signal remains on when the brushes base is in working position), while the signal lamp (18) signals that the brushes are turning.
3. Press the switch (19) to open the solenoid valve and permit the detergent solution to lower onto the brushes. The signal lamp (20) will come on, to indicate that the solenoid valve is open.

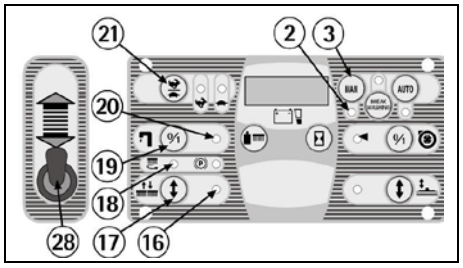

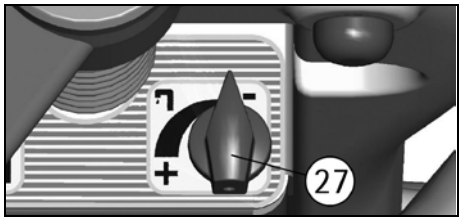

TO CARRY OUT THE FUNCTION OF ONLY DRYING:
1. Press the push button (11) of up/down squeegee to lower the squeegee. The signal lamp (12) indicates that the squeegee is lowering or lifting (the signal remains on when the squeegee is in working position).
2. Press the switch (9) of the suction motor to start the suction system. The signal lamp (8) indicates that the machine is drying.

Position the selector (28) forward to choose the forward drive.
Adjust the movement speed in forward with the push button (21) (see under paragraph "FORWARD AND BACKWARD MOVEMENT").
Pressing the accelerator pedal, the machine begins to proceed forward and to work according to the set functions.

ATTENTION:
In manual mode every function of the machine has to be activated or deactivated manually.

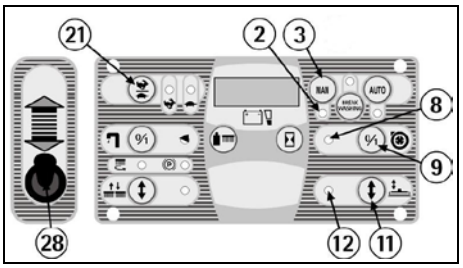

WORKING ADJUSTMENTS
Both in automatic as in manual mode, during the first metres check:
1. that the squeegee adjustment guarantees a perfect drying result (see under paragraph "ADJUSTMENT OF THE SQUEEGEE").
2. that the adjustment of the detergent solution flow is sufficient to wet the floor uniformly avoiding the leakage of detergent from the splash guards (see under paragraph "FLOW ADJUSTMENT OF THE DETERGENT SOLUTION").
3. that the brushes pressure permits an efficient washing action in function of the dirt and the speed (see under paragraph "ADJUSTMENT OF THE BRUSHES PRESSURE").

FLOW ADJUSTMENT OF THE DETERGENT SOLUTION
To adjust the detergent solution quantity that flows down onto the brushes it is necessary to act upon the solution valve knob (27) placed on the right of the steering column, rotating counterclockwise to increase it and clockwise to reduce it up to close the flow.
It is convenient to adjust the flow during working operation and at each adjustment of the brushes pressure.

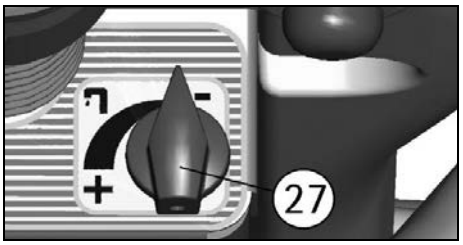

ADJUSTMENT OF THE BRUSHES PRESSURE
Both in automatic as in manual mode it is possible through the selector (10) to adjust the brushes pressure on the floor in eight established levels. During the operation, we can visualize on the display (1) the value in percentage of the electric absorption of the brushes motor by pressing the button (14).
The adjustment occurs in this way both in automatic and in manual mode.

ATTENTION:
In order not to overload the brushes motor, it is convenient to reduce the brushes pressure going from smooth floors to rough ones (ex. concrete).
The presence on the display (1) of a blinking warning from P2 to P8 indicates that the pressure level set determines an overload of the brushes motor. It is therefore necessary to reduce the pressure up to the level where the blinking warning stops.

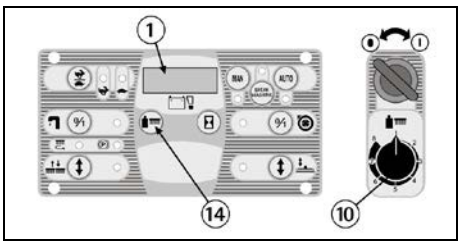

ELECTRIC PROTECTION
The machine is equipped with an electronic system of protection for all components that carry out functions of power or control. This device blocks the defective component and indicates on the display (1) the corresponding alarm from "A1", "A2" and on.

ATTENTION:
To restore the functioning of the component, turn off and on again the machine acting upon the key switch. If the problem persists, please contact the authorized technical assistance.

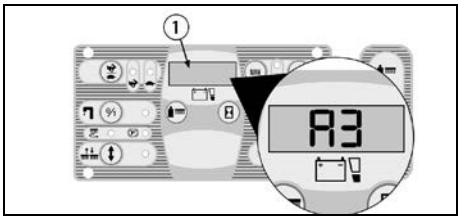

OVERFLOW DEVICE
In order to avoid serious damages to the suction motor, the machine is equipped with a mechanical float that intervenes when the recovery tank is full, closing the suction. For the machines equipped with electric float switch (optional), the switching off of the suction motor and its signal lamp (12) happens automatically.
When this happens, it is necessary to empty the recovery tank (see under paragraph "RECOVERY TANK EMPTYING AND CLEANING").

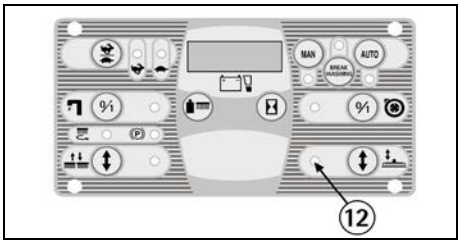

STOP OF THE MACHINE AFTER CLEANING OPERATION

IN AUTOMATIC OR MANUAL WORKING MODE:
1. A the end of the washing cycle, pressing the push button (5), the functioning of BREAK WASHING is chosen. When the signal lamp (4) is on, then the machine is in the functioning mode BREAK WASHING. In this way automatically the solenoid valve shuts down, the brushes are lifted of a few millimeters continuing to turn for about 10 seconds (drying phase of the brushes) and the collection box drains the exceeding water to the floor; then, the washing group lifts completely while the squeegee continues to remain in working position with the suction motor on, after 5 seconds the squeegee lifts and when it reaches the highest position, also the suction motor stops, with a delay of another 5 seconds.

NOTE: all these phases are carried out with the machine operating, so that the squeegee can dry the interested cleaning area from the "drying

GB

phase of the brushes" and furthermore can dry the suction hose of its dirty water.
At any time it is possible to interrupt the procedure BREAK WASHING by stopping the drive.

2. During the phase of BREAK WASHING, when the accelerator pedal is released for more than 3 seconds, the squeegee raises itself and the suction switches off automatically.
3. After three seconds, the accelerator can be pressed again, if a machine's transfer has to be made (you can anyway make the transfer even if the pedal is not lifted once that 20 seconds have passed).
4. Turn the switch key counterclockwise to switch off the machine.
5. Insert the parking brake (see under paragraph "EMERGENCY-PARKING BRAKE").

ATTENTION:
The mode (BREAK WASHING) is specific for the transfer at the end of the cleaning operation.

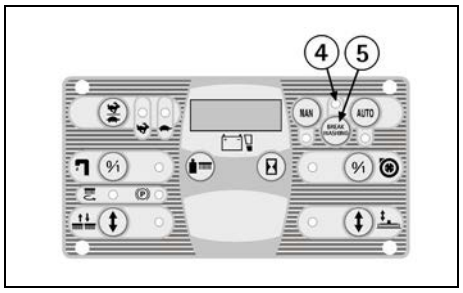

Starting again the cleaning operation:
A. by pressing the push button (6) the automatic (AUTO) functioning is chosen to start working in automatic mode.
B. by pressing the push button (3) the manual (MAN) functioning is chosen to start working in manual mode and all functions have to be re-established manually.

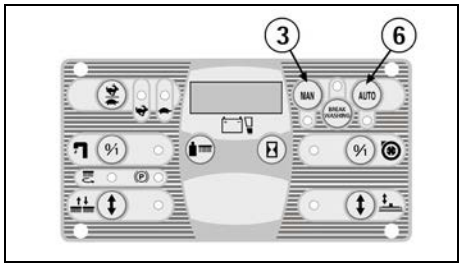

DAILY MAINTENANCE

ATTENTION:
All the following maintenance and cleaning operations that refer to the following components that are in contact with liquids and therefore:
- **Solution and recovery tanks**
- **collection box**
- **Solution and recovery filters**
- **Squeegee with their rubbers and hoses**
- **Brushes**

must be carried out using gloves to protect from contact with dangerous solutions.

RECOVERY TANK EMPTYING AND CLEANING
1. Hold the exhaust hose (1) placed in the rear low part of the machine after having taken it off from its fixing support.
2. Take off the plug (2) from the exhaust hose acting upon its lever (3) and empty the recovery tank into appropriate containers, in compliance with the respective rules what the liquid disposal concerns.
3. Take off suction cover (4) after rotating the blocking levers (5).
4. Take off the filter and filter protection (6).
5. Rinse the inside of the tank with a water jet through the hole become free of the filter, paying attention to clean the eventual float switch (7) (optional) and its protection placed right under the hole.
6. Reassemble all parts.

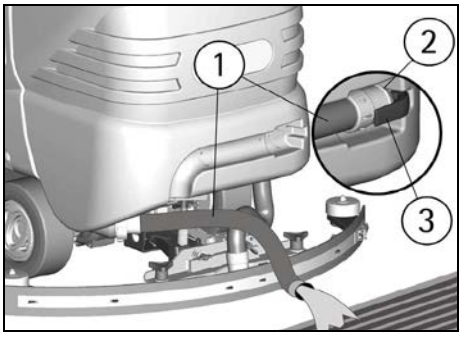

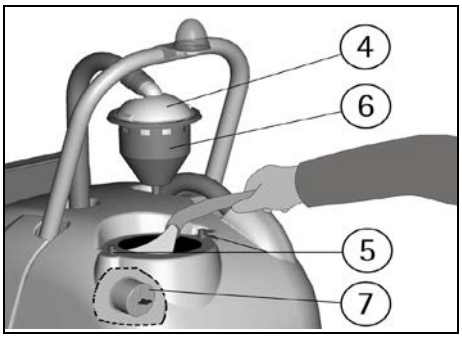

EMPTYING AND CLEANING OF THE COLLECTION BOX
The machine is equipped with a collection box for the solid dirt.
At the end of the cleaning operation it is necessary to empty and to clean it with a water jet.
For the emptying and the cleaning of the box:
1. Position the selector (10) for the adjustment of the brushes pressure on position P1.
2. Activate the machine (see under paragraph "STARTING OF THE MACHINE") positioning the selector (3) to the right to choose the manual mode (MAN).
3. Activate the push button (17) of up/down of the brushes base to lower the brushes. Once it is lowered, the brushes begin to turn.
4. Turn the key counterclockwise to turn off the machine.

ATTENTION:
To carry out above operations with the electric supply on, may cause damages to hands.

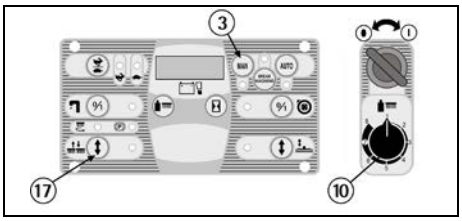

ATTENTION:
This operation must be carried out using gloves to protect from contact with dangerous solutions.

5. Unblock the bar of the side rubber after having released the knob (1).

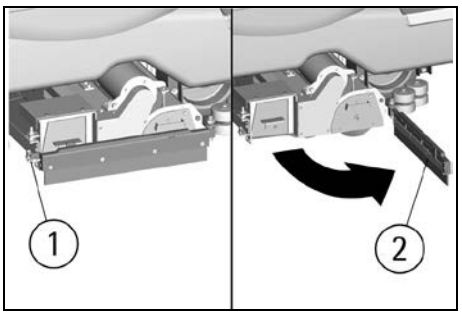

6. Open the bar of the side rubber (2) as shown in the figure.
7. Extract and carry the box by using its handles (3).

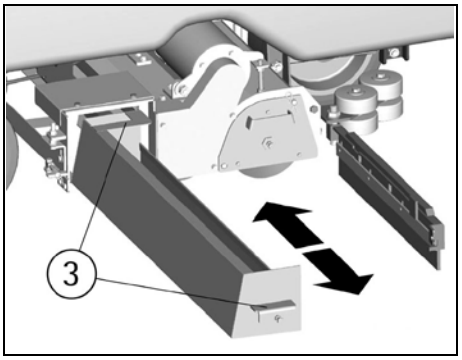

8. Empty the box into appropriate containers, in compliance with the respective rules what the liquid disposal concerns.
9. Put the collection box back into its position up to the end seat.
10. Place the bar of the side rubber (2) into its position blocking it with the knob (1).

SUCTION FILTER CLEANING
1. Take off suction cover (4) after rotating the blocking levers (5).
2. Take off the filter (8) and its filter protection (6).
3. Clean all parts with a water jet and especially the inside surfaces and the filter bottom.
4. Carry out cleaning operations carefully.
5. Reassemble all parts.

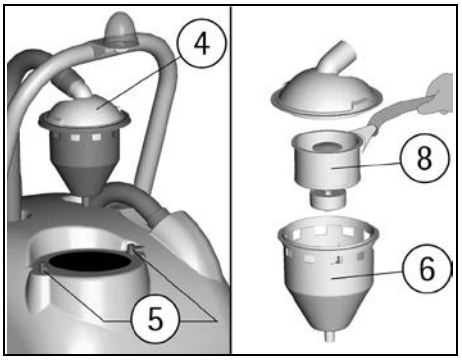

BRUSHES CLEANING
Disassemble the brushes and clean them with a water jet (for the brushes disassembly see under paragraph "BRUSHES ASSEMBLY AND DISASSEMBLY").

ATTENTION:
To carry out brushes disassembly operations with the electric supply on, may cause damages to hands.

SQUEEGEE CLEANING
Keeping the squeegee clean guarantees always the best drying result.
For its cleaning it is necessary to:
1. Take off the squeegee hose (5) from the coupling.

GB

2. Disassemble the squeegee (2) from its support (1) by loosening the knobs (4) counterclockwise and making slide the threaded parts in the appropriate slots up to their release.
3. Clean with care the internal part of the squeegee inlet eliminating eventual dirt residuals.
4. Clean with care the squeegee rubbers.
5. Reassemble all parts paying attention to put the washers (3) into position, they are two for each knob, so that they are assembled one under and the other on each of the two slots present on the support.

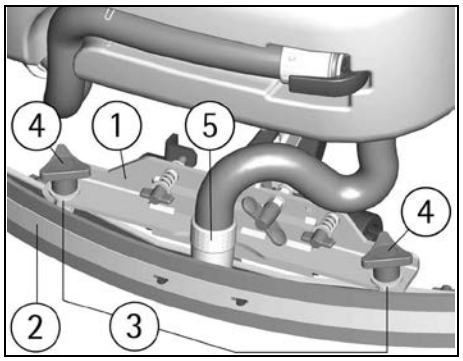

WEEKLY MAINTENANCE

REAR SQUEEGEE RUBBER CHECK
Check the squeegee rubber wear and eventually turn or replace it.
For the replacement it is necessary to:
1. Lift the squeegee (see under paragraph "STOP OF THE MACHINE AFTER CLEANING OPERATION").
2. Release the hook (1) of the rubber holder blade and take off the rubber.
3. Turn the rubber to a new side or replace it.
To reassemble the squeegee repeat inversely the operations mentioned above, inserting the rubber on the guides and blocking it with the rubber holder blade.

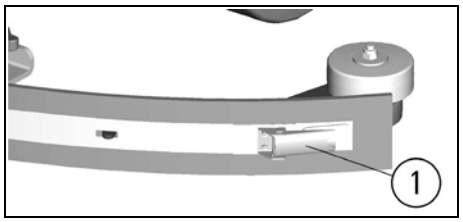

SQUEEGEE "V" TYPE (OPTIONAL)
Alternatively to the standard squeegee, a "V"-shaped squeegee is available, especially indicated for floors with large joints.
This squeegee is interchangeable with the standard one, same assembly on the machine, same adjustment in height, pressure and inclination.
Different though are the methods in assembly and disassembly of the squeegee rubbers.

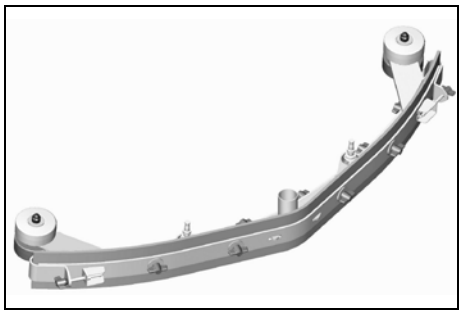

SQUEEGEE "V" TYPE (OPTIONAL): REAR RUBBER REPLACEMENT
Check the squeegee rubber wear and eventually turn or replace it.
For the replacement it is necessary to:
1. Lift the squeegee (see under paragraph "STOP OF THE MACHINE AFTER CLEANING OPERATION").
2. Unscrew the tie rods (1) on the terminals (2) of the rubber holder blade and disengage the terminals.
3. Unscrew the wing nuts (3) and take off the rubber holder blade (4).
4. Turn the rubber (5) to a new side or replace it.
To reassemble the squeegee repeat reverse the operations above mentioned, inserting first the rubber (5) into its guides, then positioning the rubber holder blade and finally screwing down all wing nuts and the tie rods of the two terminals.

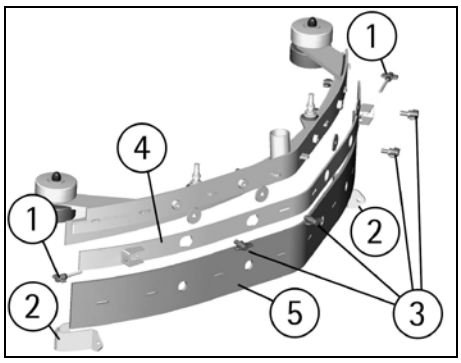

CHECK OF THE SIDE RUBBERS
With the brushes assembled, the side rubbers must touch the floor. If they are worn, they have to be replaced.
To replace the rubbers on both sides of the machine:
1. Unblock the bar of the side rubber after having released the knob (1).
2. Open the bar of the side rubber (2) as shown in the figure.
3. Take off the fixing screws (3) of the rubber blade (4) and replace the rubber.
4. Reassemble all parts.

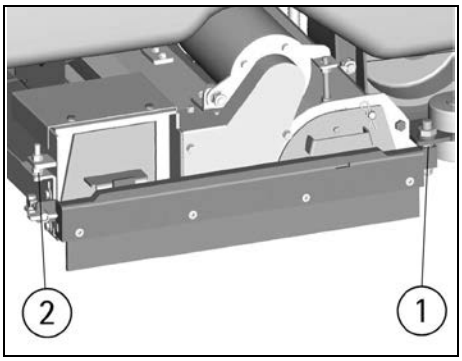

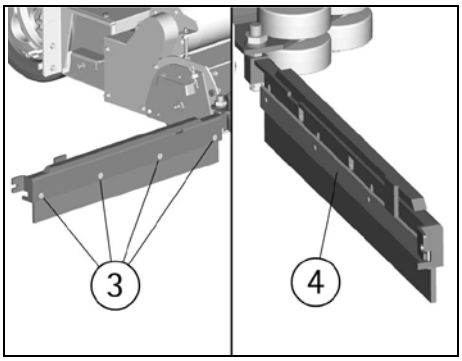

SQUEEGEE HOSE CLEANING
Weekly or in case of insufficient suction, it is necessary to check that the squeegee hose is not obstructed. Eventually, to clean it, proceed as follows:
1. Take off the hose (1) from the squeegee coupling.
2. Wash the inside of the hose with a water jet.
3. To reassemble the hose repeat inversely the above-mentioned operations.

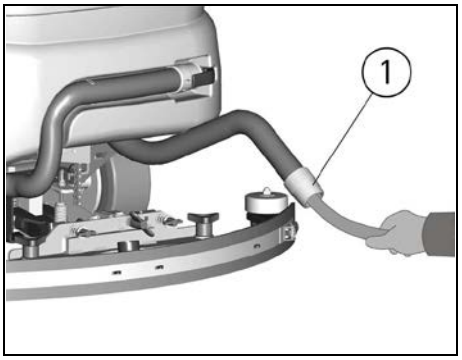

CLEANING OF THE SOLUTION TANK AND OF THE OUTER FILTER
1. Bring the machine to an appropriate place for the detergent solution draining.
2. Unscrew the solution tank cap (1).
3. Unscrew the cap of the exhaust filter (2) and take off the filter. Be careful not to lose the gasket of the cap.
4. Open the solution valve (see under paragraph "FLOW ADJUSTMENT OF THE DETERGENT SOLUTION"), so that the detergent solution flows down into appropriate containers.
5. Rinse with a water jet the solution tank and the components of the filter.
6. Reassemble all parts.
NOTE: in case of need it is possible to wash only the components of the outer solution filter as above-mentioned by closing the solution valve adjustment (see under paragraph "FLOW ADJUSTMENT OF THE DETERGENT SOLUTION"), so that the detergent solution remains in the solution tank.

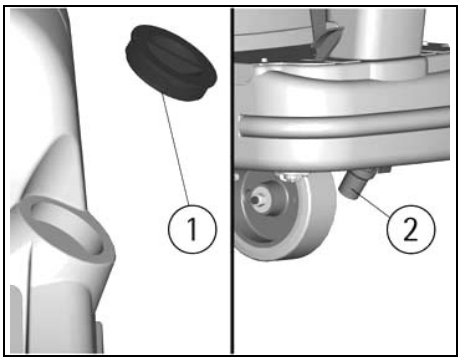

TWO-MONTHLY MAINTENANCE

FRONT SQUEEGEE RUBBER CHECK
Check the wear of the squeegee rubber and eventually replace it.
For the replacement it is necessary to:
1. Take off the squeegee (see under paragraph "SQUEEGEE CLEANING").
2. Unscrew the wing nuts in the front part of the squeegee.
3. Take off the rubber holder blade.
4. Replace the front rubber.
5. Reassemble all parts.

SQUEEGEE "V" TYPE (OPTIONAL): FRONT RUBBER REPLACEMENT
Check the squeegee rubber wear and eventually replace it.

GB

For the replacement it is necessary to:
1. Disassemble the squeegee from the support as indicated under "SQUEEGEE CLEANING".
2. Unscrew the tie rods (1) on the terminals (2) of the rubber holder blade and disengage the terminals.
3. Unscrew all wing nuts (6) and take off the rubber holder blade (7).
4. Take off the rubber (8) and replace it.
To reassemble the squeegee repeat reverse the operations above mentioned, inserting first the rubber (8) into its guides, then positioning the rubber holder blade and finally screwing down all wing nuts and the tie rods of the two terminals.

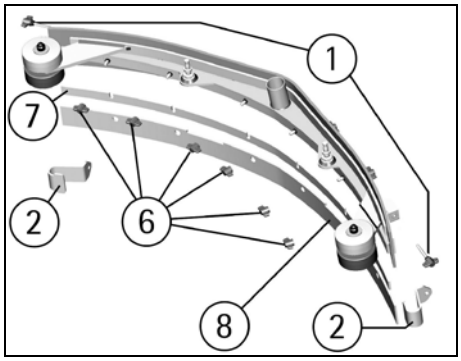

SIX-MONTHLY MAINTENANCE

CLEANING OF THE INNER FILTER SOLUTION TANK
Empty the solution tank, remove the fitting of the water outlet by taking off the two screws that fix it to the tank in the front part of the machine. Clean the inside filtrating part of the fitting from eventual dirt. Pour some water into the tank to clean it. Reassemble the fitting onto the solution tank.

CHECK OF THE BRAKE
Check the braking efficacy of both rear wheels. Should the braking be insufficient, please contact the authorized technical assistance.

TROUBLESHOOTING GUIDE

⚠ **ATTENTION:**
If with the key switch positioned clockwise to switch on the machine the display and other functions are not activated, it is necessary to check the batteries' connection to the machine (see under paragraph "CONNECTION BATTERIES' CONNECTION AND SWITCHING ON OF THE MACHINE"). If the problem persists, please contact the authorized technical assistance.

THE SUCTION MOTOR DOES NOT WORK
1. Verify that the key switch is positioned clockwise to switch on the machine. In presence of alarm signals it is necessary to switch off and on again the machine to restore the functionality.
2. Check the charge level of the batteries on the display (1).
3. Verify of having activated correctly the function of drying (see under paragraph "STARTING OF THE MACHINE").
4. Check that the recovery tank is not full.
5. Check that the float switch (2) (optional) in the recovery tank is assembled correctly.
6. If, both in mode (MAN) as (AUTO), the signal lamp (8) is on but the suction system does not work, it is necessary to rotate the recovery tank (see under paragraph "ACCESS TO THE BATTERY COMPARTMENT") and check the connection of the suction motor plug situated at the bottom of the tank.
If the problem persists, please contact the authorized technical assistance.

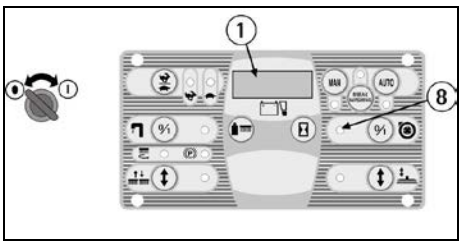

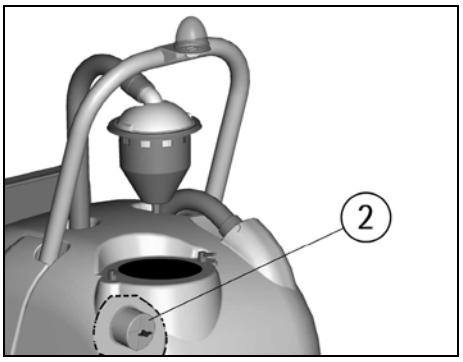

THE BRUSHES MOTOR DOES NOT WORK
1. Verify that the key switch is positioned clockwise to switch on the machine. In presence of alarm signals it is necessary to switch off and on again the machine to restore the functionality.
2. Check the charge level of the batteries on the display (1).
3. Verify of having activated correctly the function of washing with the brushes (see under paragraph "STARTING OF THE MACHINE").
4. If, both in mode (MAN) as (AUTO), the signal lamp (18) is on but the brushes do not turn, please contact the authorized technical assistance.

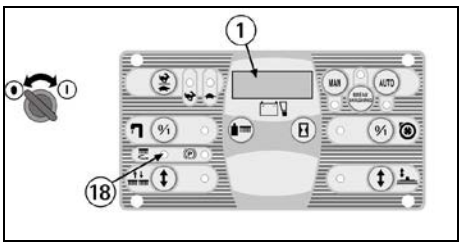

THE TRACTION MOTOR DOES NOT WORK
1. Sit on the guiding place.
2. Verify that the key switch is positioned clockwise to switch on the machine. In presence of alarm signals it is necessary to switch off and on again the machine to restore the functionality.
3. Check the charge level of the batteries on the display (1).
4. Check through the signal lamp (15) that the parking brake is not inserted and eventually release it (see under paragraph "EMERGENCY-PARKING BRAKE").
5. Press the accelerator pedal placed on the right side to start the machine.
If the problem persists, please contact the authorized technical assistance.

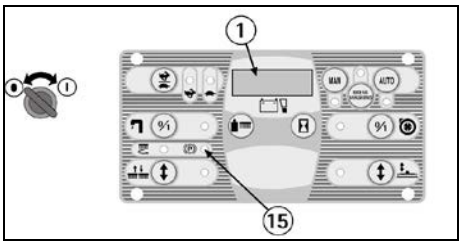

THE WATER DOES NOT COME DOWN ONTO THE BRUSHES OR IS INSUFFICIENT
1. Verify that the key switch is positioned clockwise to switch on the machine.
2. Check the charge level of the batteries on the display (1).
3. Verify of having activated correctly the function of washing with the brushes (see under paragraph "STARTING OF THE MACHINE").
4. Check that the solution valve is open (see under paragraph "FLOW ADJUSTMENT OF THE DETERGENT SOLUTION").
5. If, both in mode (MAN) as (AUTO), the signal lamp (20) is on but the detergent solution does not come down onto the brushes, it is necessary to:
   a. check the level of the liquid in the tank.
   b. check that the solution filter is clean (see under paragraph "CLEANING OF THE SOLUTION TANK AND OF THE OUTER FILTER").
   c. check that the inner filter of the solution tank is clean (see under paragraph "CLEANING OF THE INNER FILTER SOLUTION TANK").
If the problem persists, please contact the authorized technical assistance.

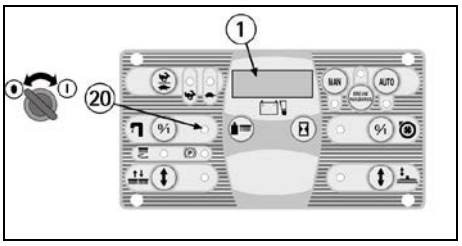

THE MACHINE DOES NOT CLEAN PROPERLY
1. The brushes do not have the suitable bristle dimension: contact the authorized technical assistance.
2. The brushes have got worn bristles. Check the brushes wear condition and eventually replace them. To replace the brushes, see instructions under paragraph "BRUSHES DISASSEMBLY" and "BRUSHES ASSEMBLY".
3. The detergent solution is insufficient: open more the solution valve (see under paragraph "FLOW ADJUSTMENT OF THE DETERGENT SOLUTION").
4. Check that the liquid detergent is in the recommended percentage.
5. Increase the brushes base pressure (see under paragraph "ADJUSTMENT OF THE BRUSHES PRESSURE").
Contact the authorized technical assistance for advice.

THE SQUEEGEE DOES NOT DRY PERFECTLY
1. Check that the suction function is on and that the recovery tank is not full.
2. Check that the squeegee rubbers are clean (see under paragraph "SQUEEGEE CLEANING").
3. Check the adjustment of the height and the inclination of the squeegee (see under paragraph "ADJUSTMENT OF THE SQUEEGEE").
4. Check that the suction and the squeegee hoses are correctly inserted in their proper seats on the recovery tank.
5. Clean the suction filter (see under paragraph "SUCTION FILTER CLEANING").
6. Clean the squeegee hose (see under paragraph "SQUEEGEE HOSE CLEANING").
7. Replace the rubbers if worn out.

EXCESSIVE FOAM PRODUCTION
Check that low foam detergent has been used. Eventually add small quantities of anti foam liquid into the recovery tank.
Please be aware that a bigger quantity of foam is produced when the floor is not very dirty. In this case please dilute detergent solution.

PROGRAMMED MAINTENANCE

INTERVENTION	DAILY	20 HOURS *	200 HOURS *	1000 HOURS *
RECOVERY TANK CLEANING	•			
SUCTION FILTER CLEANING	•			
SOLUTION TANK FILTER CLEANING		•		
BRUSHES CLEANING	•			
BRUSHES DISASSEMBLY AND CLEANING	•			
SQUEEGEE CLEANING	•			
FRONT SQUEEGEE RUBBER REPLACEMENT			•	
REAR SQUEEGEE RUBBER REPLACEMENT		•		
REPLACEMENT SIDE RUBBERS			•	
CHECK SQUEEGEE ADJUSTMENT		•		
SQUEEGEE HOSE CLEANING		•		
SOLUTION TANK CLEANING		•		
CHECK BATTERIES ELECTROLYTE		•		
CHECK OF THE BRAKE				•
TRACTION MOTOR CHECK				•
BRUSHES MOTOR CHECK				•
SUCTION MOTOR CHECK			•	
CHECK BRUSHES BASE GROUP			•	
SCREW TIGHTENING				•

* The hours refer to the ones indicated on the display (see under paragraph "HOUR METER").

RECOMMENDED BRUSHES

Brushes must be chosen depending on type of floor and dirt to be removed.
The employed material and the bristles diameter are the elements that distinguish different types of brushes.

MATERIAL	CHARACTERISTICS
PPL (Polypropylene)	Good wear resistance. Maintains characteristics with hot water up to 60°C. It is not hygroscopic.
NYLON	Excellent wear resistance, even with hot water over 60°C. It is hygroscopic. It looses its physical characteristics over the time.
TYNEX	Nylon bristles with grains of abrasive material. Use with caution in order not to mark the floor or ruin the polishing.
BRISTLES THICKNESS	Thicker bristles are more rigid and must be used on smooth floor or floor with small joints. On irregular floors with deep joints or relieves, it is recommended to use softer bristles which penetrate more easily and deeper. Please be aware that when brush bristles are worn out and therefore too small, they become rigid and unable to penetrate and clean deeper. This may also happen with thicker bristles creating brush vibration.

MACHINE	CODE	QUANTITY	DESCRIPTION	USE
sapphire 70s	48906020	2	Cylindrical brush PPL 0,7 Ø 150 x 650	Smooth floors with small joints and persistent dirt.
	48906060	2	Cylindrical brush PPL 1 Ø 150 x 650	Floors of resistant material and particularly dirty.
	48906080	2	Cylindrical brush TYNEX Ø 150 x 650	Floors of resistant material and particularly dirty.
	48906100	2	Cylindrical brush PPL 0,3 Ø 150 x 650	Delicate floors.
sapphire 85s	48906010	2	Cylindrical brush PPL 0,7 Ø 150 x 800	Smooth floors with small joints and persistent dirt.
	48906050	2	Cylindrical brush PPL 1 Ø 150 x 800	Floors of resistant material and particularly dirty.
	48906070	2	Cylindrical brush TYNEX Ø 150 x 800	Floors of resistant material and particularly dirty.
	48906090	2	Cylindrical brush PPL 0,3 Ø 150 x 800	Delicate floors.
	48906110	2	Cylindrical brush nylon 0,3 Ø 150 x 800	Delicate floors.

FLOORPUL®

FLOORPUL INTERNATIONAL N.V.
GENERAAL DEPREZSTRAAT 10A
B-8530 HARELBEKE

Tel. +32 (0) 56.22.40.44
Fax +32 (0) 56.22.89.74
e-mail: info@floorpul.com
website: www.floorpul.com

FLOORPUL FRANCE SAS:
1 RUE DE L'ORMETEAU
FR-77170 SERVON

Tel. +33 (0) 160.183.122
Fax +33 (0) 160.292.765
e-mail: floorpul@orange.com
website: www.floorpul.com