FLOORPUL®

TOPAZ 90

04/2021

EN

User and maintenance guide
(Translation of the original instructions)

Warning! Read the instructions before use.

EN

INTRODUCTORY COMMENT

Thank you for having chosen our machine. This floor cleaning machine is intended for **commercial use** and it is used for the industrial and civil cleaning and is able to clean any type of floor. During its advance movement, the combined action of the brushes and the detergent solution removes the dirt which is aspirated through the rear suction assembly, giving a perfectly dry surface.

The machine must be used only for such purpose. It gives the best performance if it is used correctly and maintained in perfect efficiency. We therefore ask you to read this instruction booklet carefully whenever difficulties arise in the course of the machine's use. In case of need, we ask you to contact our service department for all advice and servicing as may prove necessary.

CAUTION This machine is for indoor use only

CAUTION This machine shall be stored indoors only.

SUMMARY

INTRODUCTORY COMMENT 3
GENERAL RULES OF SAFETY 4
Transfer 4
Storage and disposal 4
Correct use 4
Maintenance 4
Transporting the machine 4
GENERAL RULES OF THE BATTERIES 4
TECHNICAL DESCRIPTION 5
STEERING WHEEL PANEL 6
CONTROLS BOARD LEGEND 6
MACHINE LEGEND 6
DISPLAY READING 7
Display while switching on 7
Battery settings 7
Software release 7
Controls display 7
NAVIGATION CONTROLS 9
General settings 9
Display language selection 9
Display tune (display contrast) 9
Changing the battery setting 9
Display brightness 9
MANUAL SYMBOLOGY 10
OPTIONALS 11

BEFORE USE 12
Handling of the packed machine 12
Unpacking the machine 12
Rollbar 12
Access to the battery compartment 12
Installing the batteries 12
Batteries charge level indicator 13
Charging the batteries 13
Squeegee assembly 13
Adjusting the squeegee 13
Assembling and disassembling the splash guards 13
Adjusting the splash guards 14
Assembling the brushes 14
Adjusting the steering wheel 14
Adjusting the footboard 14
Adjusting the seat 15

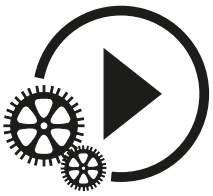

FLOOR CLEANING 16
Connecting the battery connector and switching on the machine 16
Recovery tank 16
Solution tank 16
Detergent solution reserve signal 16
Flow rate selection 16
WORK 16
Manual mode work 16
Brushes pressure adjustment 17
Speed adjustment, forward and backward 17
Automatic mode work 17
Standard mode - 3S 17
Selection mode standard - 3S 18
Optional mode – 3SD (Solution Saving System Dispenser) 18
Selection mode standard – 3SD 18
Installation detergent tank (mode 3SD) 18
Selection detergent level (mode 3SD) 18
Ozone system (optional) 18
Combining the Ozone system with the 3S and 3SD systems 19
Suction motor silent mode 19
Standby mode 19
Horn 19
Emergency button 19
Parking brake 19
Manual movement of the machine 19
Overflow system 19

STOP OF THE MACHINE AFTER CLEANING OPERATION 21
Break washing mode 21
DAILY MAINTENANCE 21
Draining and cleaning the recovery tank 21
Cleaning the suction filter 21
Automatic disassembly of the brushes 22
Cleaning the brushes 22
Cleaning the squeegee 22
WEEKLY MAINTENANCE 22
Rear squeegee rubber check 22
Cleaning the squeegee hose 22
Cleaning the solution tank and the filter 22
TWO-MONTHLY MAINTENANCE 23
Front squeegee rubber check 23
SIX-MONTHLY MAINTENANCE 23
Splash guard rubber check 23
TROUBLESHOOTING GUIDE 23
The suction motor does not work 23
The brushes motor does not work 23
The traction motor does not work 24
Water does not come down onto the brushes 24
The machine does not clean properly 24
The squeegee does not dry perfectly 24
Excessive foam production 24
PROGRAMMED MAINTENANCE 25
Periodic ordinary maintenance chart 25

EN

GENERAL RULES OF SAFETY

The rules below have to be followed carefully in order to avoid injury to the operator and damage to the machine.
– Read the labels carefully on the machine. Do not cover them for any reason and replace them immediately if damaged.
– **ATTENTION:** The machine must be used exclusively by authorized staff that have been instructed on its correct and proper use.
– **ATTENTION:** Do not use the machine on areas having a higher gradient than the one stated on the number plate.
– **ATTENTION:** The machine is not to be used by persons, children included, with reduced physical, sensorial or mental capabilities, or with lack of experience or knowledge, unless they could benefit, through the intermediation of a responsible person for their safety, by a supervision or instructions concerning to its use.
– During the operation of the machine, pay attention to other people and especially to the children.
– Children shall not play with the machine.
– Children cannot carry out cleaning and maintenance of the machine.

TRANSFER

– **WARNING:** Do not use the machine in areas where it is likely that the operator is hit by falling objects since the appliance is not provided with a falling object protective structure (FOPS).
– Do not strike shelvings or scaffoldings where there is danger of falling objects.
– Leaving the machine in parking position, take off the key.
– Do not use the machine as a means of transport.
– Adapt the working speed to the adhesion conditions: particularly, slow down before narrow curves have to be faced.

STORAGE AND DISPOSAL

– Storage temperature: between 0°C and +55°C (32°F and 131°F).
– Perfect operating temperature: between 0°C and +40°C (32°F and 104°F).
– The humidity should not exceed 95%.
– Provide for the scrapping of the material of normal wear following strictly the respective rules.
– The batteries need to be removed from the machine before its scrapping.
– When your machine has to stop activity, provide for the appropriate waste disposal of its materials, especially oils, batteries and electronic components, and considering that the machine itself has been, where possible, constructed using recyclable materials.

CORRECT USE

– Do not use the machine on surfaces covered with inflammable liquids or dusts (for example hydrocarbons, ashes or soot).
– In case of fire, use a powder-based fire-extinguisher. Do not use water.
– Do not use the machine in explosive atmosphere.
– The machine has to carry out simultaneously the operations of washing and drying. Different operations must be carried out in restricted areas prohibited to non-authorized personnel and the operator has to wear suitable shoes.
– Signal the areas of moist floors with suitable signs.
– Do not mix different detergents, avoiding harmful odours.
– Avoid brushes operation when the machine is standing still in order to prevent floor damages.

MAINTENANCE

– If the machine does not work properly, check by conducting simple maintenance procedures. Otherwise, as for technical advice from an authorized assistance centre.
– For any cleaning and/or maintenance operation take off the battery connection.
– Where parts are required, ask for ORIGINAL spare parts from the distributor and/or from an authorized dealer.
– Use only ORIGINAL brushes.
– Do not take off the protections which require the use of tools for their removal.
– Do not wash the machine with direct water jets or with high water pressure nor with corrosive material.
– Every 200 working hours have a machine check by an authorized service department.
– Before using the machine, check that all panels and coverings are in their position as indicated in this use and maintenance catalogue.
– Restore all electrical connections after any maintenance operation.

TRANSPORTING THE MACHINE

WARNING: Before transporting the machine on an open truck or trailer, make sure that:
– All tanks are empty.
– Recovery tank cover is latched securely.
– The machine is tied down securely.
– The machine's electromagnetic brake is engaged (not manually overridden).

GENERAL RULES OF THE BATTERIES

– At any intervention on the batteries, use suitable acid-proof gloves and glasses.
– Do not smoke near the batteries and do not approach them with free flames.
– Check that a fire-extinguisher is available on site.
– Be very careful in case of leakages or liquid outlets because corrosive.
– Do not place any metallic tools onto the batteries. Risk of short circuit!
– It is compulsory to hand over exhaust batteries, classified as dangerous waste, to an authorized institution according to the current laws.

EN

TECHNICAL DESCRIPTION	U/M	
Cleaning width	mm	900
Squeegee width	mm	1100
Working capacity, up to	m^2/h	6750
Brushes diameter	mm	2 x 460
Brushes rpm	rpm	190
Pressure on the brushes	kg	140
Brushes motor	W	2 x 700
Traction motor	W	1200
Suction motor	W	2 x 570
Suction vacuum	mbar	190
Type of drive		automatic
Movement speed (max)	km/h	7,5
Maximum gradient	%	10
Solution tank	l	180
Reserve solution tank	l	20
Recovery tank	l	190
Machine length	mm	1962
Machine height with roll-bar (without roll-bar)	mm	1865 (1613)
Machine width (without squeegee)	mm	985
Weight of the machine (empty and without batteries)	kg	453
Gross weight of the machine (in conformity with EN 60335-2-72 art. 5.z102)	kg	1083
Battery voltage	V	36
Capacity of the batteries	Ah_5	320
Weight of the batteries	kg	380
Battery van (LxPxH)	mm	540 x 620 x 460
Acoustic pressure level (in conformity with EN 60704-1) Lpa	dB (A)	<70
Sound power level Lwa	dB (A)	<70
Class		III
Protection level	IP	23
Packed machine weight	kg	533
Package dimensions (LxDxH)	cm	213x181x115

EN

STEERING WHEEL PANEL

1. DISPLAY
2. UP/DOWN BRUSHES BUTTON
3. ON/OFF SUCTION MOTOR BUTTON
4. UP/DOWN SQUEEGEE BUTTON
5. MODE SELECTOR BUTTON
   - AUTOMATIC
   - MANUAL
   - BREAK WASHING
6. MODE BUTTON (WATERWORKS SELECTION)
7. DETERGENT SOLUTION LEVEL BUTTON
8. MAXIMUM SPEED INCREASE BUTTON
9. MAXIMUM SPEED DECREASE BUTTON

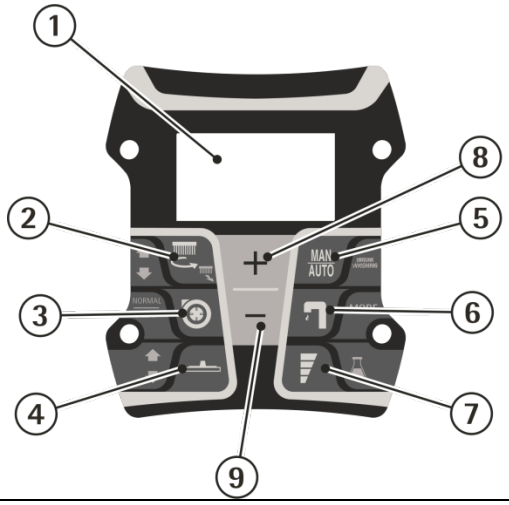

CONTROLS BOARD LEGEND

10. SAFETY BUTTON
11. KEY SWITCH
12. HORN
13. DIRECTION LEVER (FORWARD/BACKWARD)
14. FLOW RATE SELECTOR

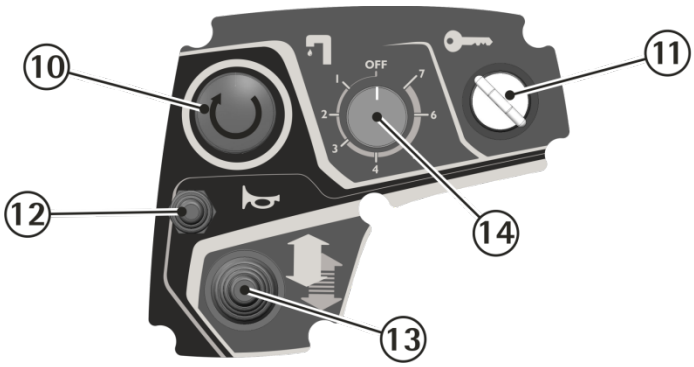

MACHINE LEGEND

1. CONTROLS BOARD
2. STEERING WHEEL PANEL
3. STEERING WHEEL
4. ROLLBAR
5. SQUEEGEE HOSE
6. DRAIN HOSE CAP
7. DRAIN HOSE
8. RECOVERY TANK DRAIN HOSE CAP
9. SOLUTION TANK
10. RECOVERY TANK
11. RECOVERY TANK COVER
12. SEAT
13. SOLUTION TANK CAP
14. DRIVE PEDAL
15. SOLUTION TANK DRAIN CAP
16. TRACTION WHEEL
17. FRONT LIGHT
18. SQUEEGEE ASSEMBLY
19. REAR WHEELS
20. BRUSHES BASE ASSEMBLY
21. DETERGENT SOLUTION FILTER
22. FOOTBOARD

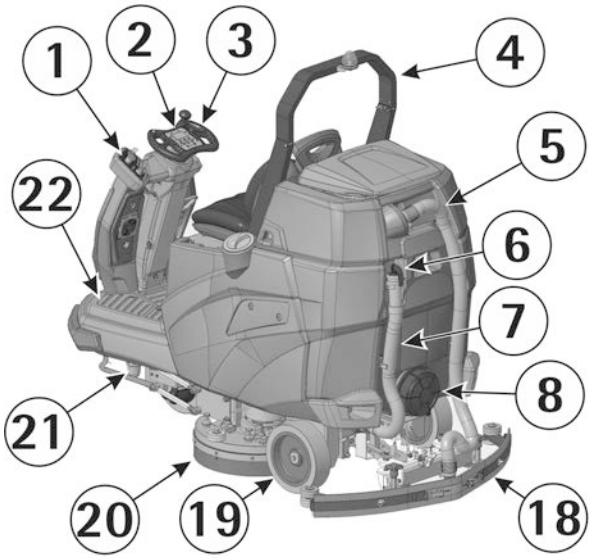

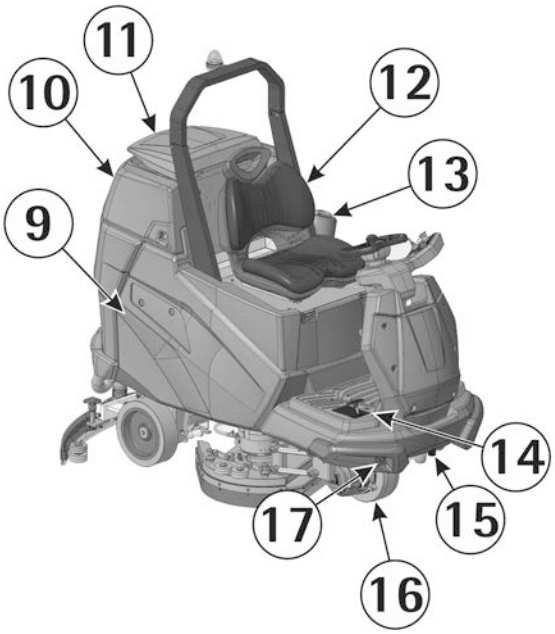

EN

DISPLAY READING

DISPLAY WHILE SWITCHING ON

When the machine is switched on, the display shows the following screen.

Next screen will be displayed as follows:

SOFTWARE RELEASE

Display card software release

Chopper card software release

HOUR METER

BATTERY SETTINGS

36V GEL	Gel batteries settings
36V AGM	AGM batteries settings
36V WET	Lead/acid batteries settings

CONTROLS DISPLAY

Standard Mode

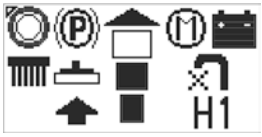

Parking brake on		Suction motor off		Brush base up		Squeegee up		Maximum speed level set		Standard mode selection	
Automatic mode		Suction motor on		Brush base down		Squeegee down				Solenoid valve on	
Manual mode		Suction motor quiet mode		Brushes on						Solenoid valve off	
Battery charge level				Brush base pressure level	P1					Water flow level	H1
										3S mode selection	3S
										Ozone mode selection	O_3
										Ozone mode selection + 3S	$O_3$3S

EN

After selecting the 3S or the 3SD mode (see the 3S/3SD mode paragraph), the display will show the following controls:

3S mode

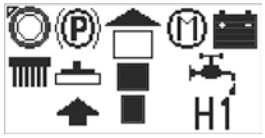

Solenoid valve on	
Solenoid valve off	
Water flow level	H1

3SD mode

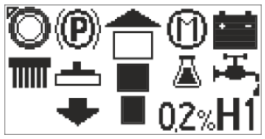

Solenoid valve on	Detergent percentage 0.2%
Solenoid valve off	
Water flow level H1	

After selecting the Ozone mode (see Ozone mode selection chapter), the display will show the following inputs:

Ozone mode

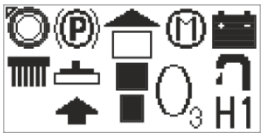

Solenoid valve open	
Solenoid valve closed	

If the machine is equipped with the Ozone system and an optional hydraulic circuit (3S or 3SD) and is chosen to combine the Ozone with one of these two systems, the display will show the following inputs:

Ozone mode + 3S or 3SD

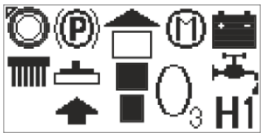

Solenoid valve open	
Solenoid valve closed	
Water flow level	H1

After selecting the break washing mode (see Break Washing mode selection chapter), the display will show the following input:

Mode break washing

BREAK WASHING

EN

NAVIGATION CONTROLS

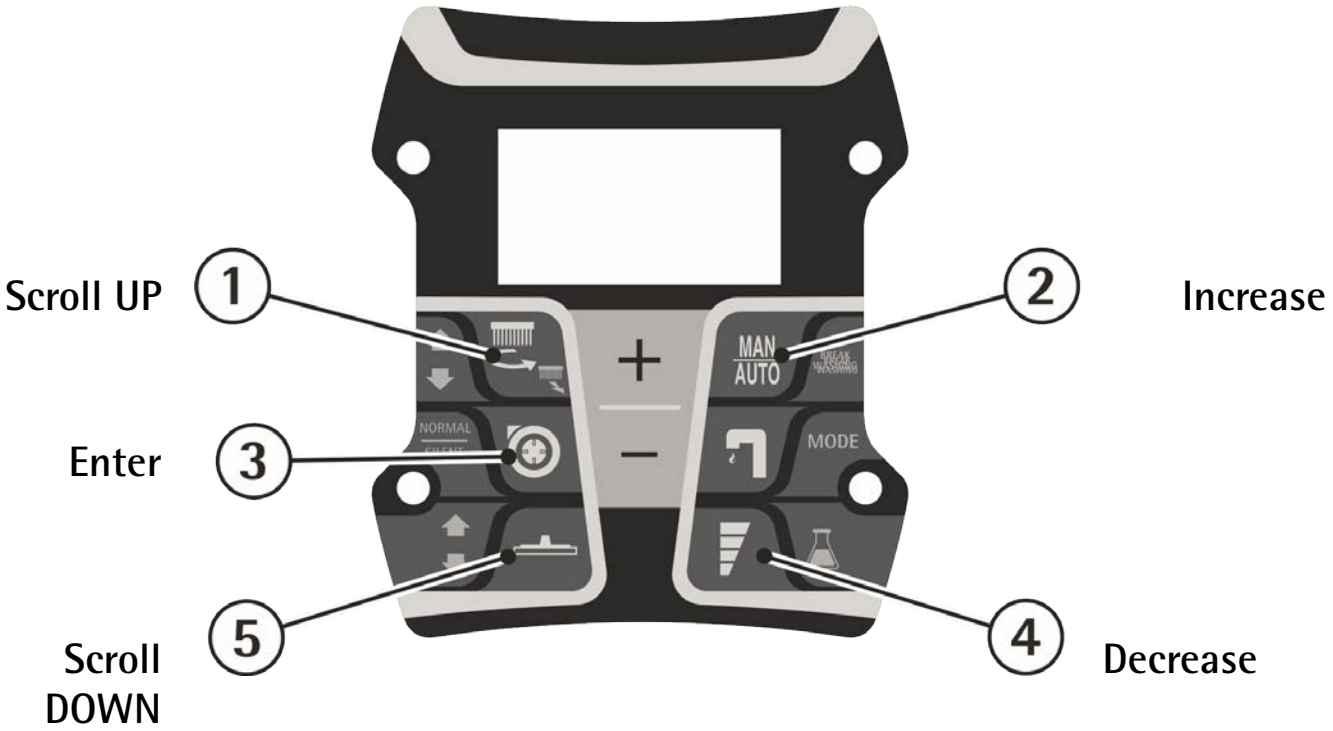

GENERAL SETTINGS

To enter the general settings menu, use the controls panel as follows:

1. Keep the buttons (1) and (4) pressed simultaneously.
2. Turn the key on.
3. When "INSERT PASSWORD:0" is displayed, press the ENTER button (3).

Once entered the GENERAL SETTINGS it will be possible to change the following settings by simply scrolling the controls menu using buttons (1) and (5).

DISPLAY LANGUAGE SELECTION

English is the default language that can be switched to Italian.
To select the language first display "Language", then select it using buttons (2) and (4).
Use button (3) to confirm.

CHANGING THE BATTERY SETTING

Once entered the general setting it is possible to set the machine depending on the batteries installed (AGM / GEL / LEAD-ACID).
To select the proper setting first display "BATTERY", then select it scrolling with buttons (2) and (4).
Use button (3) to confirm.

A wrong setting may result in an irreversible damage of the battery.
ALWAYS check to have set the proper parameter.
You can the battery setting when the machine is switched on (see "BATTERY SETTINGS or DISPLAY READING").

DISPLAY TUNE (DISPLAY CONTRAST)

Once entered the general setting it is possible to improve the display contrast using button (2) to increase it and button (4) to decrease it.
Use button (3) to confirm.

DISPLAY BRIGHTNESS

Once entered the general setting it is possible to increase or decrease the display brightness using button (2) to increase it and button (4) to decrease it.
Use button (3) to confirm

EN

MANUAL SYMBOLOGY

Icon denoting the open book.
Indicates that the operator has to read the manual before the use of the machine.

Icon denoting the open book.
For the good functioning of the battery recharger, read the manual of the constructor.

Warning Icon.
Read carefully the sections marked with this symbol, for the security of both the operator and the machine.

Warning Icon.
Risk of acid leakage from the batteries.

This icon points that it is imperative to disconnect the wiring from the batteries acting upon the connector before any operation on the machine.

Icon indicating the part of the manual related to the machine use.

Obligation symbol requiring the wear of protection glasses.

Obligation symbol requiring the wear of protection gloves.

Symbol preceding an information about the correct use of the machine.

Symbol indicating operations to be carried out only by qualified personnel.

Icon indicating the part of the manual related to the unboxing, preparation and start of the machine.

Icon indication the part of the manual related to the maintenance of the machine.

EN

OPTIONALS

Optionals support

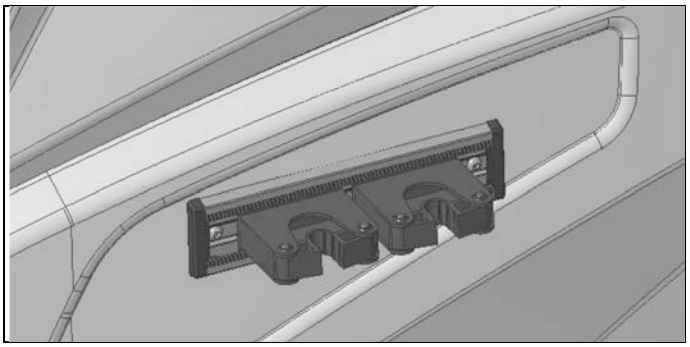

Ozone system O3

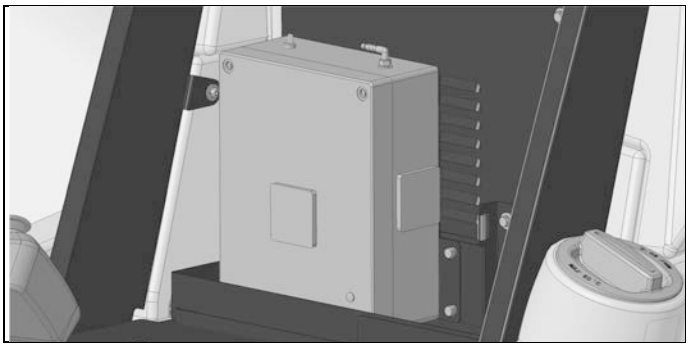

3SD System (Solution Saving System Dispenser)

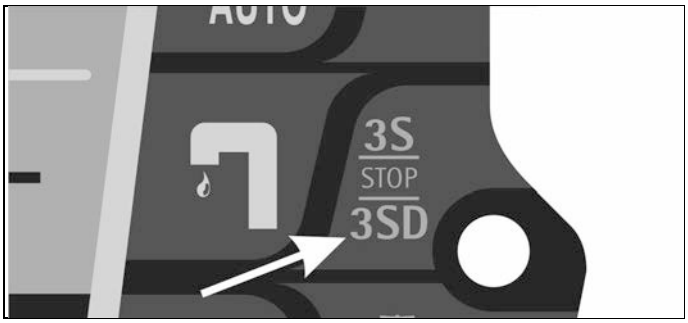

BEFORE USE

HANDLING OF THE PACKED MACHINE
The machine is supplied with suitable packing foreseen for fork lift truck handling.
For the package dimensions please look at the "TECHNICAL DESCRIPTION" table.

Do not place more than 2 packagins on top of each other.

UNPACKING THE MACHINE
1. Remove the external packing.
2. Before moving the machine from the pallet, it is necessary to unblock the parking brake that blocks the traction motor wheel. To do this, keep the lever (1) lifted. With the delivery of the machine we also supply a cord that permits the lever operation (1). After having moved the machine, take off the cord and keep it for eventual re-use.

When the parking brake is released manually, for example when the machine has to be moved without batteries, avoid covering slopes and do not park on them either.

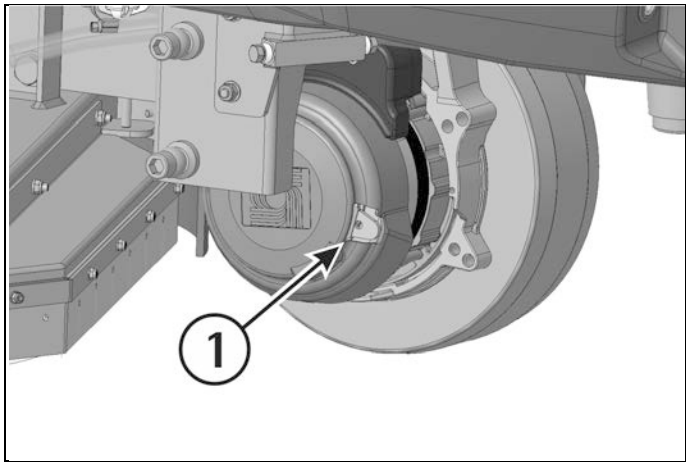

3. Release the machine from the wooden brackets by moving it backwards, as indicated in the figure, avoiding heavy contacts to mechanical parts.

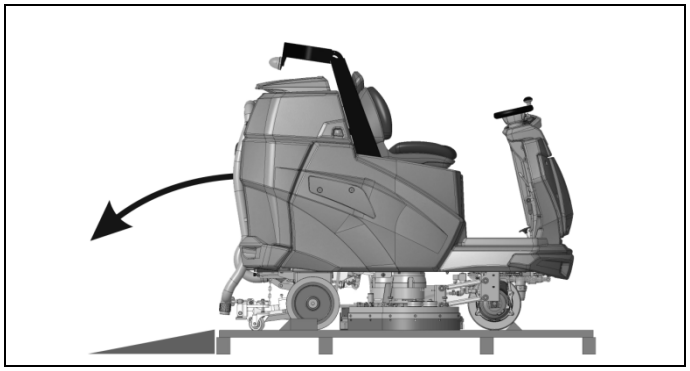

Keep the pallet and the wooden brackets for an eventual transport.
The portable slope is not included in the packaging.

ROLLBAR
The machine is provided with a tipping rollbar.
To rotate the rollbar from an open to a closed position, or the other way around, work on blocks (1).

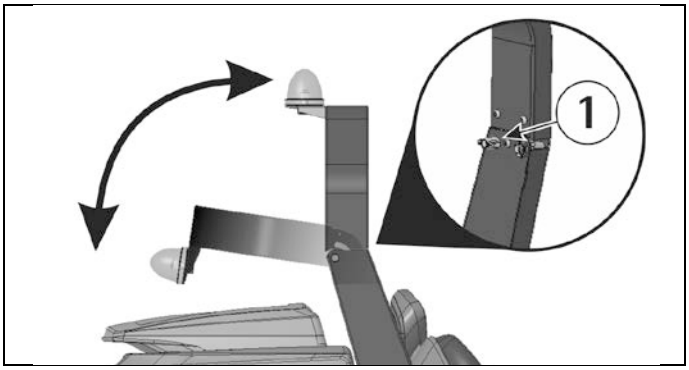

ACCESS TO THE BATTERY COMPARTMENT
Open the rollbar.
To reach the battery compartment lift the seat base by grabbing the handle (1).

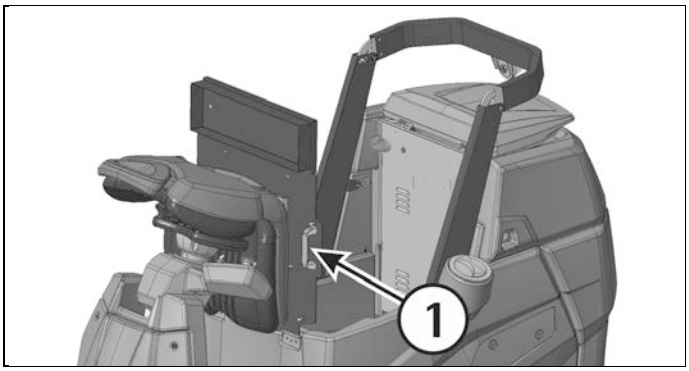

If the machine is equipped with the optional 3SD water system, it is necessary to take off the support of the detergent tanks after lifting the seat base.
To remove the support, unscrew the 6 fixing screws.

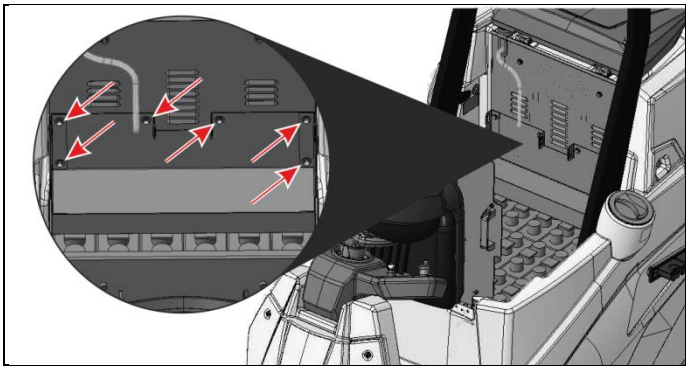

INSTALLING THE BATTERIES
The standard machine is provided with the batteries set on lead/acid.
For different settings see chapter "BATTERY SETTINGS".
Batteries must be handled using suitable lifting equipment (due to weight, considering the type of batteries chosen, and coupling system).
The batteries must be in accordance with CEI 21-5 Norms.

Strictly follow manufacturer/distributor indications for the maintenance and recharge of the batteries. All installation and maintenance operations must be executed by specialized staff, using suitable protection accessories.

For batteries installation it is necessary to reach the battery compartment as indicated under paragraph "ACCESS TO THE BATTERY COMPARTMENT".
1. Place the batteries in its compartment.

2. Connect the terminals, respecting the polarities, avoiding contact with other parts that could create short circuit.

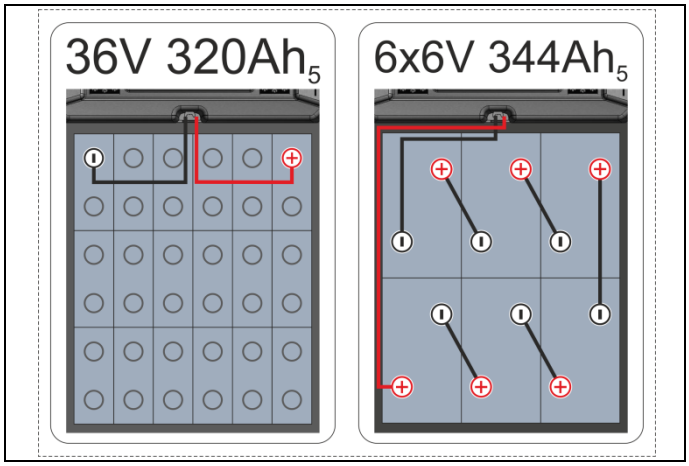

BATTERIES CHARGE LEVEL INDICATOR
The battery charge level is visualized on the display with its respective symbol (see "CONTROLS DISPLAY").

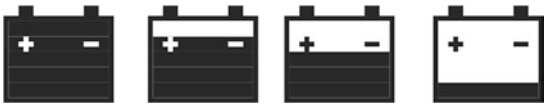

When the last segment of charge starts blinking, the battery is almost low and the suction and brushes functions are disabled.

When even the last segment of charge turns off, the battery is completely low and the machine stops.

CHARGING THE BATTERIES

1. Plug the connector (2) of the battery recharger into the battery connector (1).
2. Proceed for the recharging.

Once that the battery recharging is completed:
3. Disconnect the connector of the battery recharger from the battery connector (1).
4. Connect instead the machine connector (3).

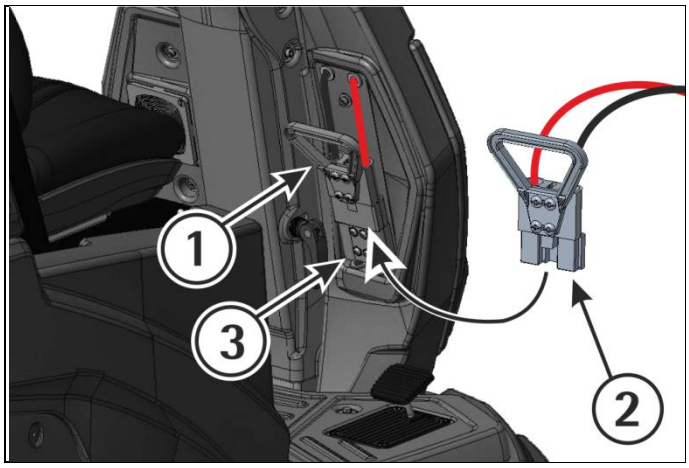

SQUEEGEE ASSEMBLY
1. Insert the two stud bolts (2) situated on the upper part of the squeegee (3) inside the slots present on the support (1).
2. To block the squeegee, tighten the stud bolts (2).
3. Insert the squeegee hose (4) into its coupling, respecting its position as indicated in the figure.

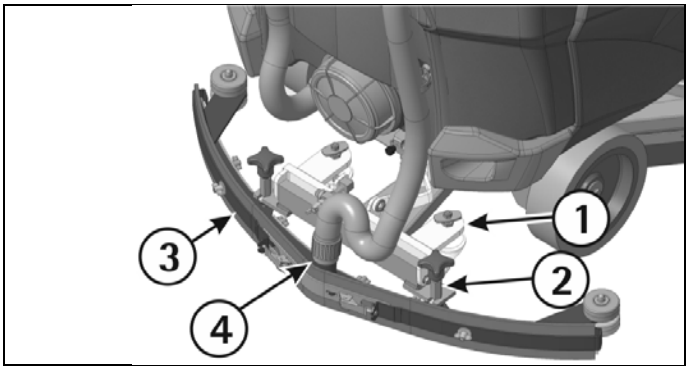

ADJUSTING THE SQUEEGEE
In order to have a perfect drying result through the squeegee, the rear rubber must have the lower bending uniformly adjusted in all its length. For the adjustment, it is necessary to put oneself in working condition and therefore the suction motor has to be switched on and the brushes have to function together with the detergent solution.

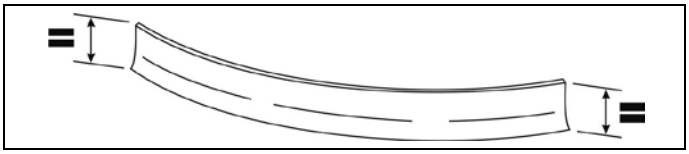

<u>The lower part of the rubber is too much bent</u>
Take off the pressure rotating the wing nut (5) counterclockwise.

<u>The lower part of the rubber is not much bent</u>
Increase the pressure rotating the wing nut (5) clockwise. Check that the wheels which adjust the height do not rest on the floor, in this case adjust them as indicated in paragraph "Height adjustment".

<u>The bending is not uniform</u>
Adjust the squeegee inclination rotating counterclockwise the wing nut (6) to increase the bending in the central part, or clockwise to increase the bending on the extremities.

<u>Height adjustment</u>
Once that the pressure and inclination of the squeegee have been adjusted, it is necessary to fix this optimum condition making touch slightly the wheels onto the floor. Rotate clockwise the registers (7) to lower the wheels or counterclockwise to raise them. Both wheels must be adjusted in the same measure. To act upon the register (7) loosen at the same time the nuts (8), adjust the height then fix the adjustment by tighten the nuts (8).

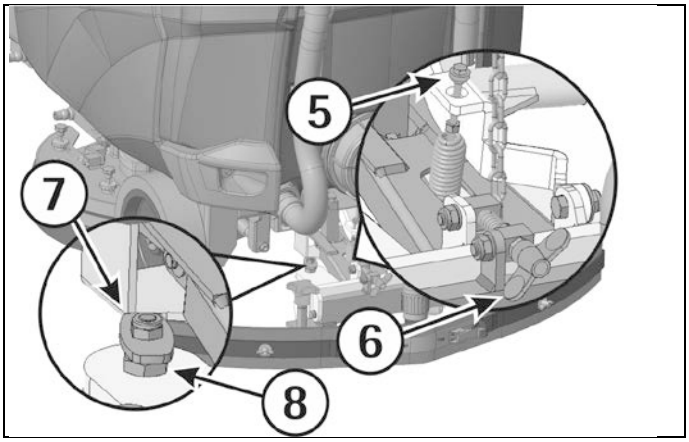

ASSEMBLING AND DISASSEMBLING THE SPLASH GUARDS

For the splash guards cleaning, it is necessary to take off the two metal covers.

To assemble the covers, it is necessary to proceed as follows:
1. Take off the clips (1) present on the pins (2) fixed to the brushes base.
2. Take off the cover from the brushes base.

For the assembly it is necessary to proceed inversely with above-mentioned operation.

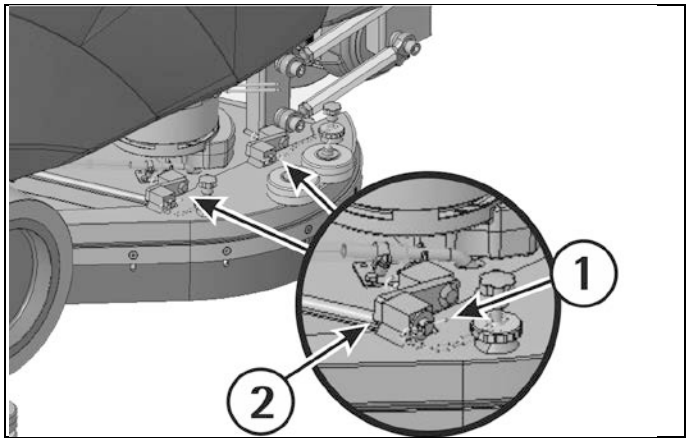

ADJUSTING THE SPLASH GUARDS

When the brushes base is lowered on the floor the splash guards have to slightly touch the floor. To adjust them proceed as follows:
1. Loosen the rings (2).
2. Turn the knob (1) clockwise to raise the splash guards or counterclockwise to lower them.
3. Fasten the ring (2).

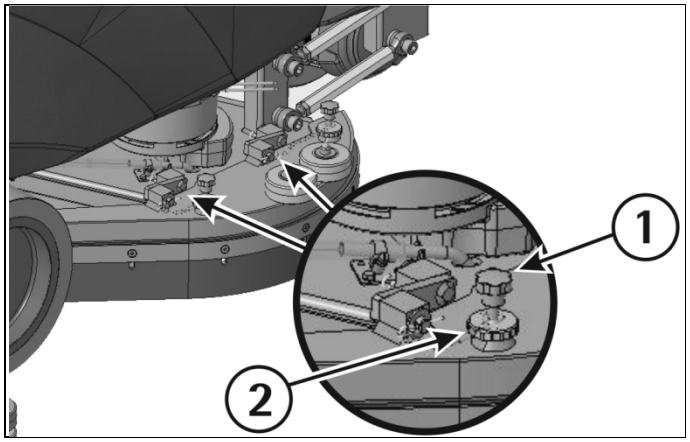

ASSEMBLING THE BRUSHES

To assemble the brushes, it is necessary that the brushes base is in the lifted position. If it is not lifted, proceed as follows:
Without the operator seated, turning the key switch clockwise, the display comes on and after 3 seconds all working groups come off automatically and are lifted from the floor.
Switch off the machine turning the key counterclockwise.
With the brushes base group in lifted position lock the brushes rotating them as in the picture below.

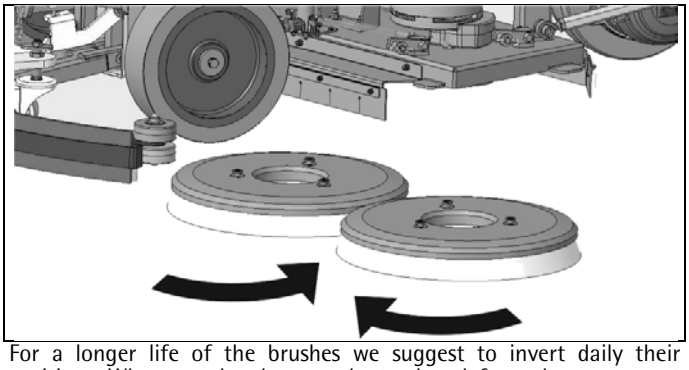

For a longer life of the brushes we suggest to invert daily their position. Whenever brushes result to be deformed we suggest reassembling them in the same position, in order to avoid that the different inclination of the bristles causes excessive motor overload or troublesome vibrations.

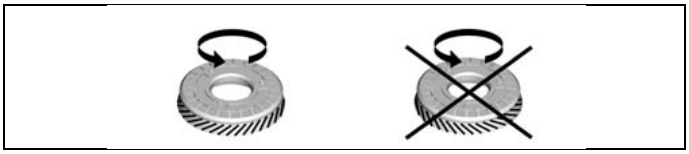

ADJUSTING THE STEERING WHEEL

Using lever (1) it is possible to unlock the steering wheel to adjust the distance from the operator.

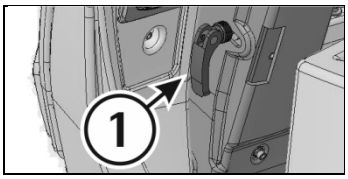

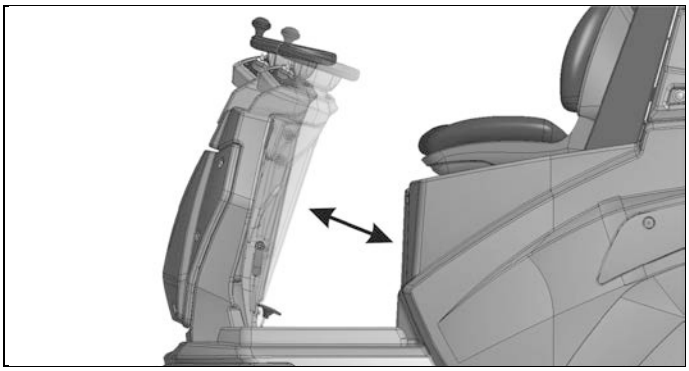

To increase or decrease the lever locking strength, turn the ferrule.

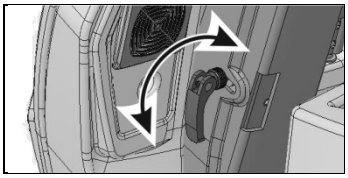

ADJUSTING THE FOOTBOARD

Using the knob (1) it is possible to adjust the height of the footboard.

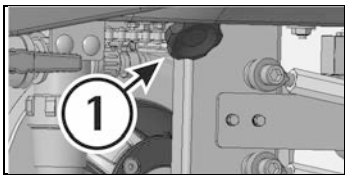

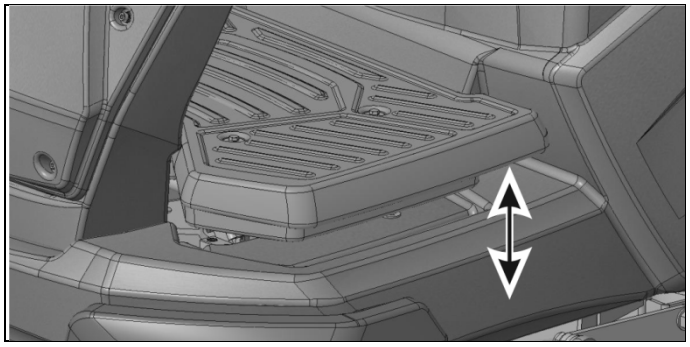

ADJUSTING THE SEAT

Using the lever (1) it is possible to adjust the seat position.

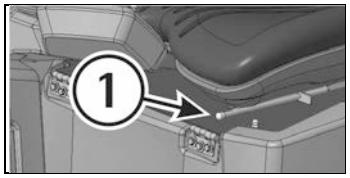

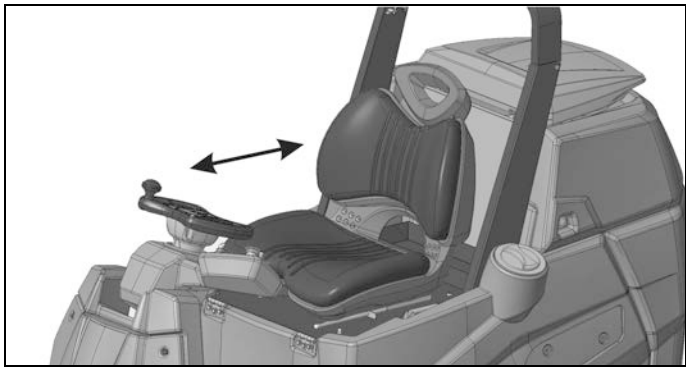

FLOOR CLEANING

CONNECTING THE BATTERY CONNECTOR AND SWITCHING ON THE MACHINE

Once that the battery recharging has been completed:

1. Disconnect the connector (2) of the battery recharger from the battery connector (1).
2. Connect then the battery connector (1) to the machine connector (3).

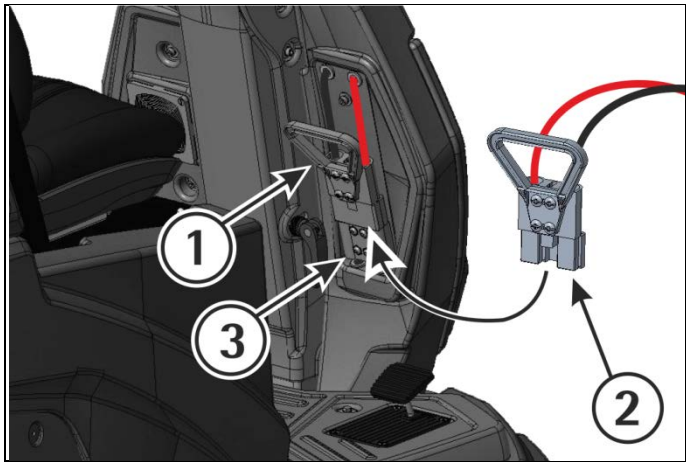

RECOVERY TANK

Verify that the rear cap (1) is properly tightened and that the exhaust hose plug (2) is well closed.
The recovery tank is provided with a cover (3) that blocks itself thanks to the vacuum created by the suction motor during the use.

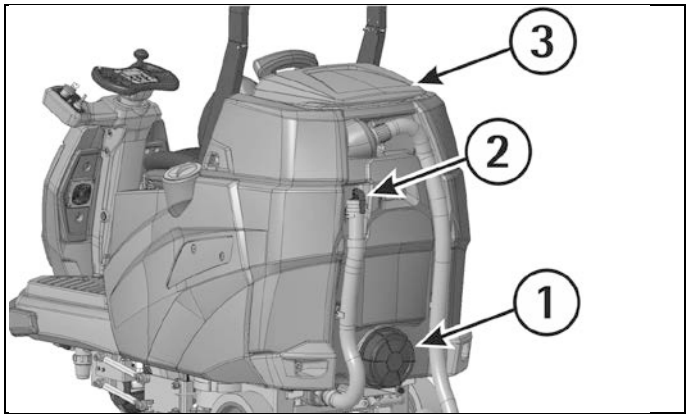

SOLUTION TANK

The capacity of the detergent solution tank is indicated in the technical data.
Unscrew the cap placed on the left part of the machine and fill the detergent solution tank with clean water at a maximum temperature of 50°C. Add the liquid detergent in the percentage and conditions foreseen by the manufacturer. To avoid excessive foam presence, which could cause problems to the suction motor, use the minimum percentage of detergent.

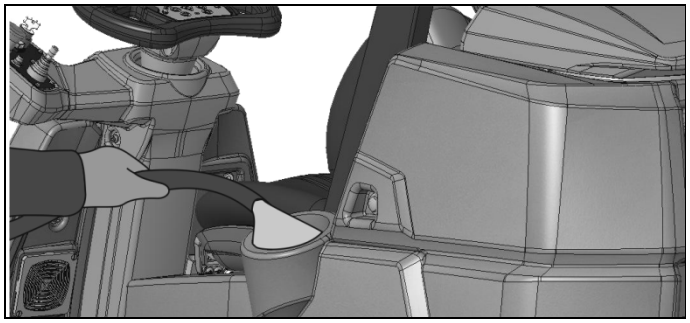

Screw the solution tank cap.

Use always low foam detergent.
Protect yourself from accidental contact or splashes with the protection devices provided by the detergent manufacturer.
To avoid foam presence, before starting working operation, introduce into the recovery tank a minimum quantity of anti-foam product.
Never use pure acid.

DETERGENT SOLUTION RESERVE SIGNAL

When H_2O appears on the display it means that the machine is running out of detergent solution, so there are about 20 liters left.
This signal is both on full display and in small display.

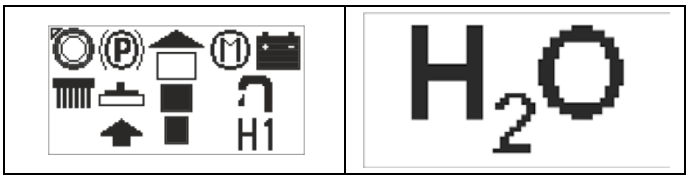

FLOW RATE SELECTION

Using the selector (1) the solenoid valve can be activated or turned off.
The level changes the value of H from H1 to H7 and on the display the flow rate will be immediately displayed.

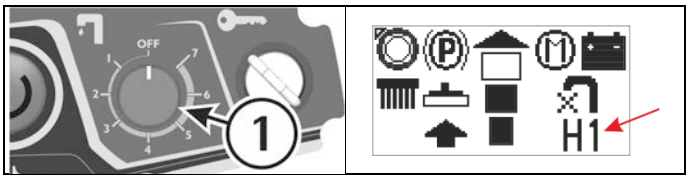

When in standard mode the detergent solution flow stays the one that has been set.
In 3S mode the detergent solution flow changes depending on the speed of the machine.

WORK

A safety device avoids the machine's movement if the operator is not properly placed on the seat.

To turn on the machine:

1. Step on the footboard.
2. Turn the key (1) clockwise to turn on the machine.
3. Check the battery level on the display.
   The machine will go automatically in manual mode (MAN).
4. Select the driving direction using the lever (2).

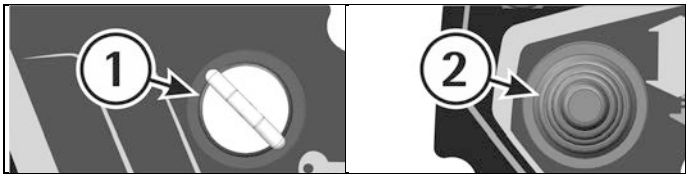

MANUAL MODE WORK

1. Check that the machine is set in manual mode, if not press button (1) and the display will show the corresponding symbol.

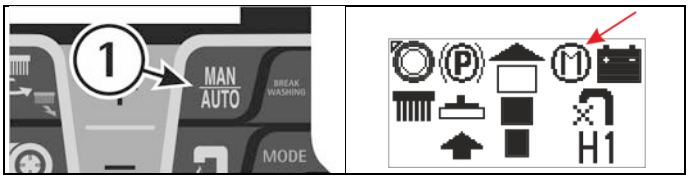

2. Press the suction motor button (2); the suction motor symbol changes depending if the motor is turned on or off, the motor will then start to work.

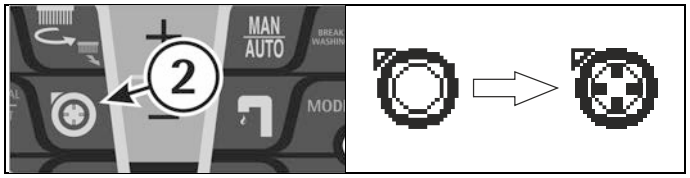

3. Adjust the detergent solution flow rate by using the selector (3).

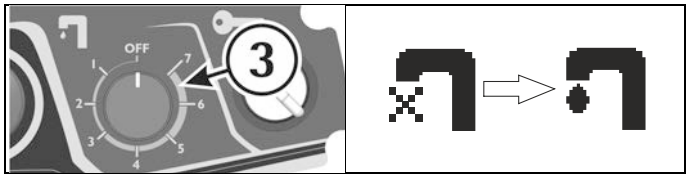

4. Lower the brushes base on the floor pressing button (4); the display will show first the lifting down symbol and then the brushes on symbol.

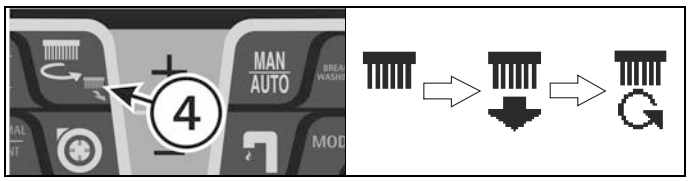

5. Lower the squeegee pressing the button (5).

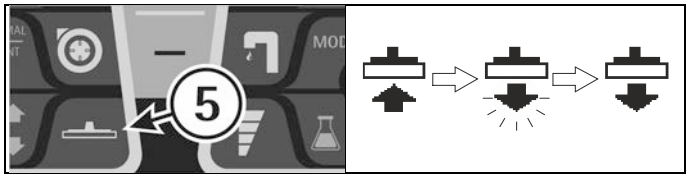

6. While running the first meters, check that the squeegee adjustment guarantees a perfect drying action and that the detergent solution flow is appropriate. It has to be sufficient to wet the floor uniformly avoiding the leakage of detergent from the splash guards. Always consider that the correct quantity of solution detergent depends on the type of floor, dirtiness and machine speed.

Manual mode:
- Lowering the squeegee with the suction motor off will automatically turn on the suction motor;
- Turning off the suction motor with the squeegee lowered down will automatically lift up the squeegee and turn off the suction motor.

BRUSHES PRESSURE ADJUSTMENT

To adjust the pressure press button (1) twice.

On the display value P1, P2 or P3 will blink.
Press the buttons (+) and (-) to select the pressure, the value will set once it will stop blinking on the display.

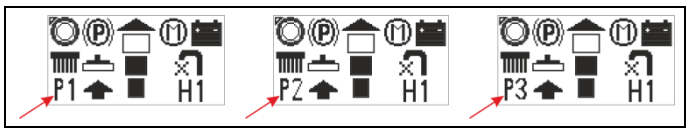

SPEED ADJUSTMENT, FORWARD AND BACKWARD
Before running the machine select the maximum speed level during work. Press buttons (+) and (-) to see the speed level on the display.

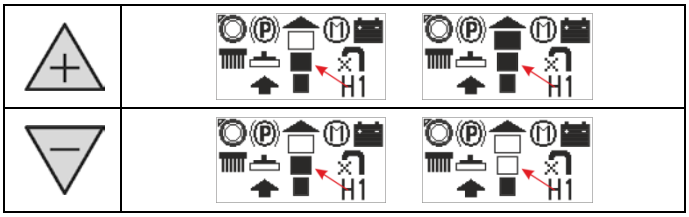

To move the machine, select the direction using the lever (1) placed on the dashboard.

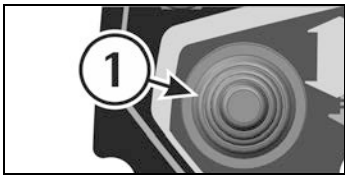

Press the pedal (2) placed on the footboard to enable the speed.
Use the pedal (2) to adjust the speed during work. The speed will change from the minimum to the maximum previously set and visible on the display.

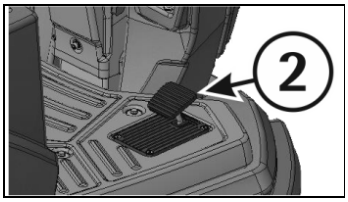

If backward movement is selected the brush base will stay down, the squeegee will lift up.
When the forward movement will be selected again the squeegee will go down.

AUTOMATIC MODE WORK
Automatic mode is helpful to simplify the operator work.
1. Check that the machine is set in automatic mode, if not press button (1) and the display will show the corresponding symbol.

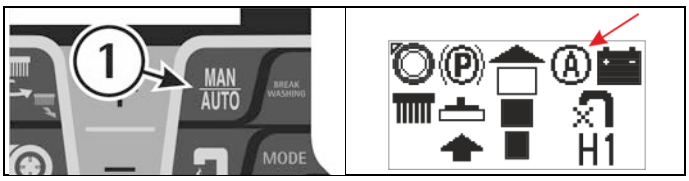

2. Press the pedal placed on the footboard.
Once the pedal is pressed the machine runs forward, the brush base goes down and simultaneously the squeegee goes down, then the solenoid valve opens itself and brushes and suction motor start working.
Before running the machine, it is possible to set the brushes pressure and the detergent solution level.
The values set will show immediately on the display.
To adjust the detergent flow, see under "FLOW RATE SELECTION".
After releasing the pedal: the brush base goes up, the brushes motors stop, the solenoid valve closes itself and the suction motor shuts off.

If during working in automatic mode the brush base or squeegee button is pressed, the machine switches to manual mode.

STANDARD MODE - 3S
The detergent solution flow rate is always adjusted using an 8 way manipulator (see chapter "FLOW RATE SELECTION").
When in standard mode the detergent solution flow is constant, related to the number selected with the manipulator.
In 3S mode the flow rate selected with the manipulator changes depending on the speed of the machine in order to have a constant amount of water for each square meter.
If the machine is not moving the speed is 0 then no water comes out.

SELECTION MODE STANDARD - 3S

To switch from a mode to another press the button (1) once.

On the display the related circuit symbol starts blinking (see chapter "FLOW RATE SELECTION").

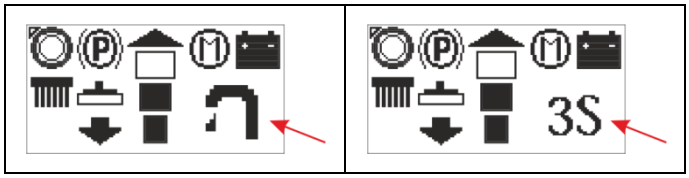

Press the buttons (2) to select the desired mode.

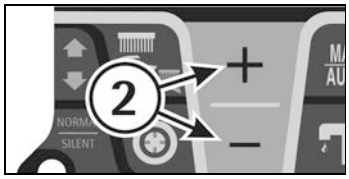

After a couple of seconds the symbol will stop blinking and the mode will be selected.

OPTIONAL MODE – 3SD (SOLUTION SAVING SYSTEM DISPENSER)

It is a system that allows the predefined dosage of the percentage amount of detergent that will be mixed with the water coming from the solution tank.
The detergent solution flow rate is always adjusted using an 8-way manipulator (see chapter "FLOW RATE SELECTION").

If the automatic dosing system is not used for long periods, it is advisable to wash the hoses with water only by running the pump for a few minutes. To do this, use a tank filled with water only.

SELECTION MODE STANDARD – 3SD

To switch from a mode to another press the button (1) once.

On the display the related circuit symbol starts blinking (see chapter "FLOW RATE SELECTION").

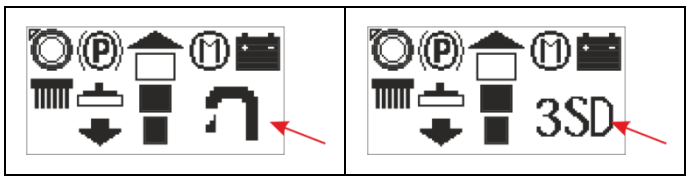

Press the buttons (2) to select the desired mode.

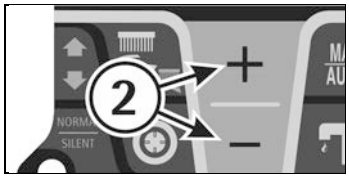

After a couple of seconds the symbol will stop blinking and the mode will be selected.

INSTALLATION DETERGENT TANK (MODE 3SD)

To use the machine in 3SD mode it is necessary to install the tank containing the detergent as follows:

Insert the tank into the appropriate housing.

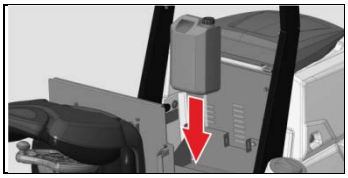

Remove the cap of the tank and replace it with the adapter.
The hose has to touch the tank bottom.

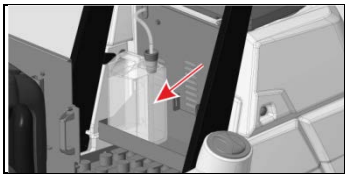

Stop the tank with the belt.

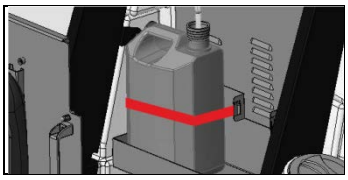

Always choose the detergent according to the dirt to be washed and follow strictly the instructions of the manufacturer.
Do not mix detergents of different types.

SELECTION DETERGENT LEVEL (MODE 3SD)

When using the machine in 3SD mode it is necessary to set the quantity of detergent to be used.

Press the button (1) to select the detergent level.

The percentage value will start blinking on the display.

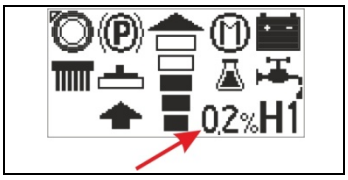

Press the navigation buttons (2) to select the desired amount of detergent.

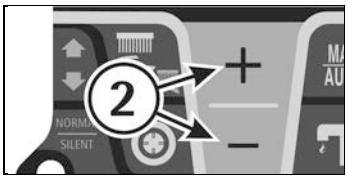

After a few seconds the value stops blinking and the detergent percentage is selected.
With the value 0% only water is used for washing.

OZONE SYSTEM (OPTIONAL)

The machine can produce water with an ozone level high enough to disinfect the surfaces cleaned.

To switch from one mode to another, press the button (1) once.

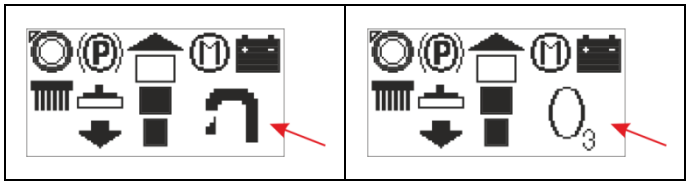

When the O3 icon stops blinking the system is being selected.

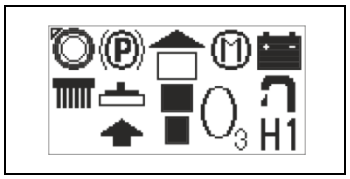

In order to operate the ozone system the best way, proceed as follows:

1. Make sure that the inside of the solution tank is clean, eventually rinse it making at least a couple of fillings and depletions.
2. Fill the solution tank with tap water (do not add any detergent).

Ozone production is instantaneous and is produced only when water is dispensed. During the work, the system symbol blinks during the Ozone production.

Ozone is a very penetrating gas and it can be irritating.

The ozonated water is strongly oxidizing, therefore in order to protect from oxidization (rust) the metal parts of the machine, it is better to rinse with water all the lower parts of the machine at least once a week.

At the end of the work, it is not necessary to empty the solution tank.

COMBINING THE OZONE SYSTEM WITH THE 3S AND 3SD SYSTEMS

If the machine, in addition to the Ozone system, is equipped also with one of the two 3S or 3SD circuits, it is possible to work with both ozone and water dosage.
Since work with ozone must only be carried out with clean water, only the 3S mode combined with ozone will be possible.
To switch from one mode to another, press the button (1) once.

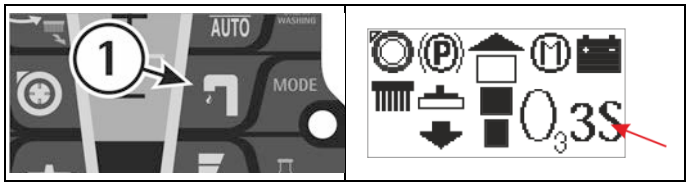

SUCTION MOTOR SILENT MODE

It is possible to start the silent mode of the suction motor by pressing for a few seconds the switch-on button (1) of the suction motor.
When the silent mode is on the symbol on the display changes.

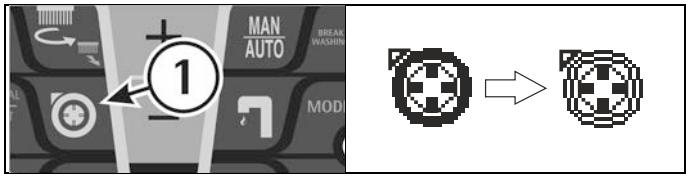

STANDBY MODE

After 10 minutes of inactivity, if the machine is on, it goes in stand-by mode and the display turns off. To start again press any button on the instrument board or press the drive pedal, the display will then turn on again and after a few seconds the machine returns operative.

HORN

The machine is provided with a horn that can be activated pressing button (1).

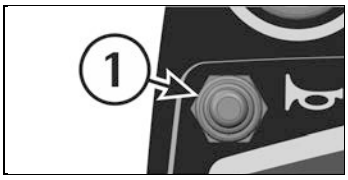

EMERGENCY BUTTON

In case of emergency press button (1) placed on the dashboard. All the functions and the movement will be immediately disabled.
To reactivate them turn the button clockwise.

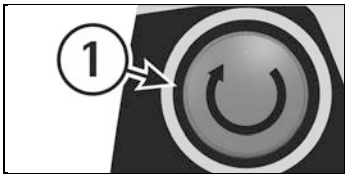

PARKING BRAKE

The machine is equipped with a parking brake on the traction motor wheel that operates at the complete release of the pedal or when the machine is without batteries. In case of an emergency or simply to stop the machine, it is sufficient to release the pedal. The brake remains inserted up to when the pedal is pressed again. When the batteries are connected and when the key switch is positioned on 1, on the display the brake signal comes on.

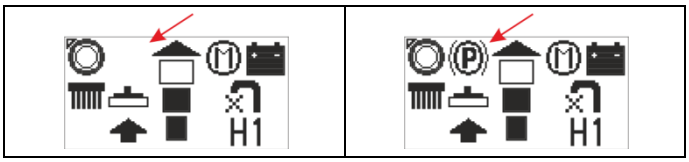

MANUAL MOVEMENT OF THE MACHINE

To move the machine manually, it is necessary to unblock the parking brake that blocks the traction motor wheel. To do this, keep the lever (3) lifted. With the delivery of the machine we also supply a cord that allows the lever operation (3).
After having moved the machine, take off the cord and keep it for eventual re-use.

When the parking brake is released manually, for example when the machine has to be moved without batteries, avoid covering slopes and do not park on them either.

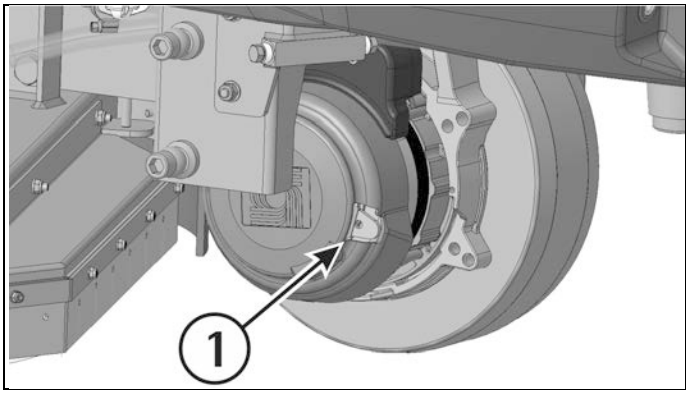

OVERFLOW SYSTEM

In order to avoid major damages to the suction motors the machine is equipped with a floater that works when the recovery tank is full. The symbol is shown on the display.

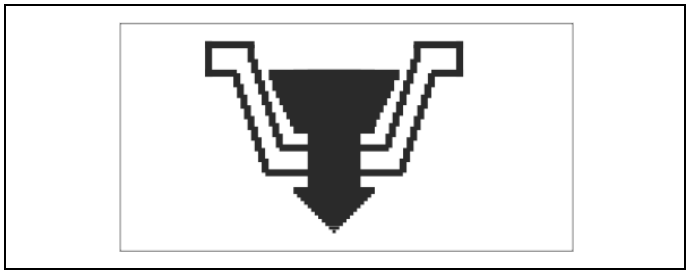

When this happens, it is necessary to drain the recovery tank (see chapter “DRAINING AND CLEANING THE RECOVERY TANK”).

STOP OF THE MACHINE AFTER CLEANING OPERATION

BREAK WASHING MODE

IN AUTOMATIC OR MANUAL WORKING MODE:

1. At the end of the washing cycle, keeping the button (1) pressed, the functioning of BREAK WASHING is chosen. When the signal lamp (2) is on, then the machine is in BREAK WASHING mode.

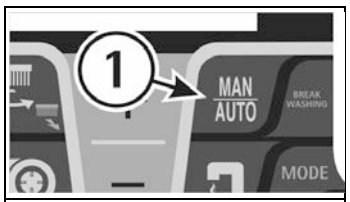

2. When the mode is on, the display will show BREAK WASHING.

In this way automatically the brushes lift, the solenoid valve shuts down and it is possible to finish the drying operation for a total time of about 15 seconds, afterwards also the squeegee is lifted and the suction stops.

NOTE: all these phases are carried out with the machine operating, so that the squeegee can dry the interested cleaning area from the "drying phase of the brushes" and furthermore can dry the suction hose of its dirty water. At any time it is possible to interrupt the procedure BREAK WASHING by stopping the drive.

During the BREAK WASHING, if the drive pedal is released for more than 3 seconds the machine will automatically switch to manual mode (MAN).

The mode (BREAK WASHING) is specific for the transfer at the end of the cleaning operation.

DAILY MAINTENANCE

DRAINING AND CLEANING THE RECOVERY TANK

1. Hold the exhaust hose placed on the rear part of the machine after having taken it off from its fixing support.
2. Take off the plug from the exhaust hose acting upon its lever and empty the recovery tank into appropriate containers, in compliance with the respective rules what the liquid disposal concerns.

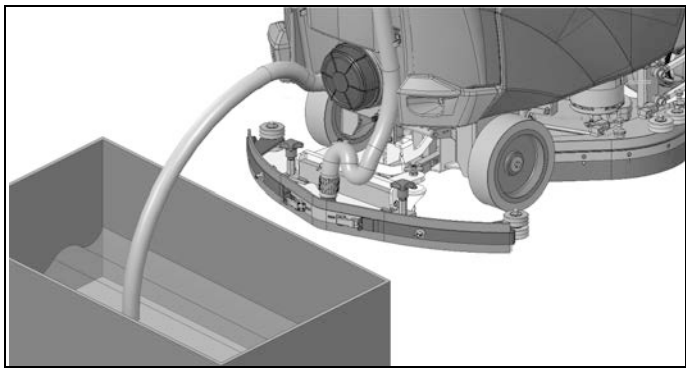

3. After the tank is completely drained, take off the drain box (1) by releasing the lever (2) and unscrew the cap (3).

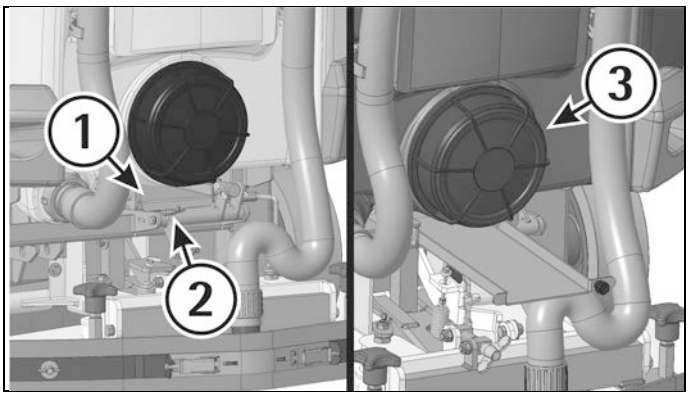

4. Clean the inside of the tank using a water jet.

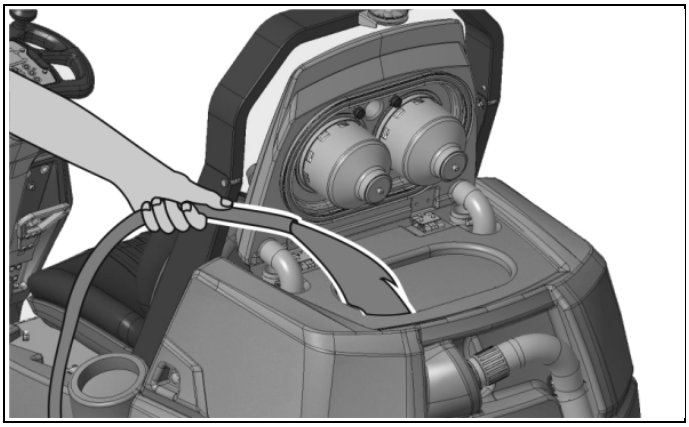

CLEANING THE SUCTION FILTER

1. Open the cover (1) and unscrew the knob (2) to release the filter protection (3).
2. Rotate the filter protection clockwise to release it.

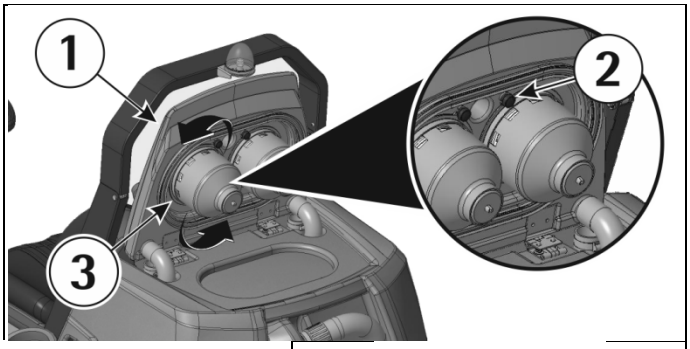

3. Take off the filter and its protection.
4. Clean with a water jet especially the bottom part and the sides of the filter.
5. Do the cleaning procedure precisely.
6. Reassemble the filter.

Absolutely do not clean the inside of the recovery tank cover otherwise the suction motor will be damaged irreversibly.

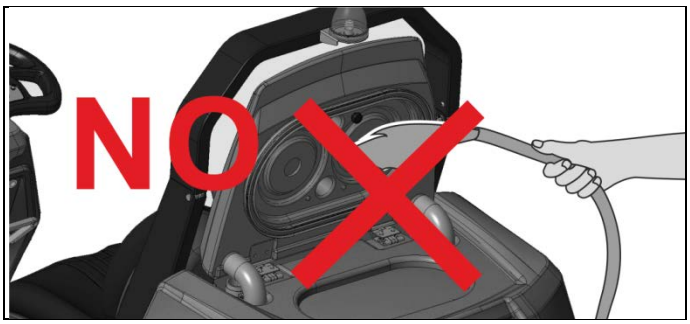

AUTOMATIC DISASSEMBLY OF THE BRUSHES

With the brushes base lifted from the floor and the manipulator of the direction in central position press the brushes base button (1) for a few seconds.

CLEANING THE BRUSHES

Take off the brushes to clean them with a water jet (to read how to do it see chapter "AUTOMATIC DISASSEMBLY OF THE BRUSHES").

CLEANING THE SQUEEGEE

Keeping the squeegee clean guarantees always the best drying result. For its cleaning it is necessary to:

1. Take off the squeegee hose (4) from the coupling.
2. Disassemble the squeegee (3) from its support (1) loosening the stud bolts (2) and making them slide inside the slots up to release them.
3. Clean with care the internal part of the squeegee inlet eliminating eventual dirt residuals.
4. Clean with care the squeegee rubbers.
5. Reassemble all parts.

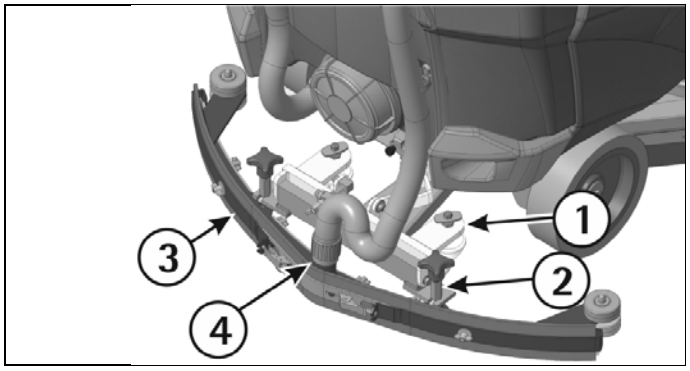

WEEKLY MAINTENANCE

REAR SQUEEGEE RUBBER CHECK

Check the squeegee rubber wearing and eventually turn it or replace it.

To replace the rubber it is necessary to:

1. Lift up the squeegee (see under "STOP OF THE MACHINE AFTER CLEANING OPERATION").
2. Unlock the hooks (1).
3. Unscrew the wing nuts (2) to take off the outer rubber blades (3) and then the central one (4).
4. Take off the rubber (5) to turn it or replace it.

To reassemble the squeegee do these operations backwards.

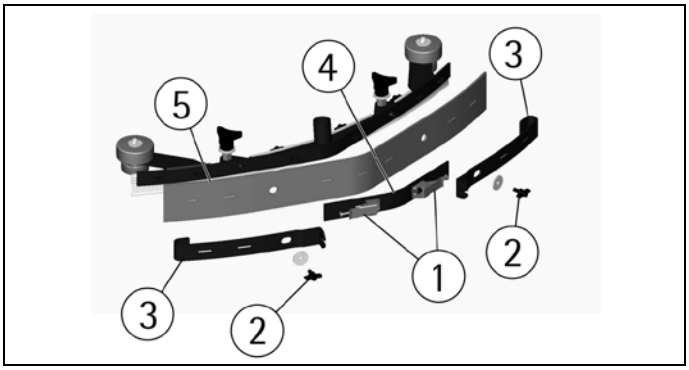

CLEANING THE SQUEEGEE HOSE

Weekly or in case of insufficient suction, it is necessary to check that the squeegee hose is not obstructed. Eventually, to clean it, proceed as follows:

1. Take off the hose (1) from the squeegee coupling.

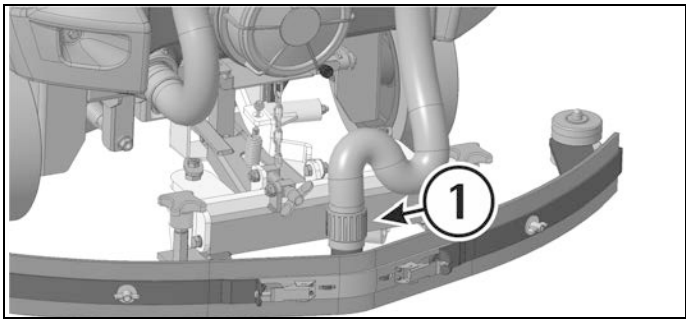

2. Wash the inside of the hose with a water jet.
3. To reassemble the hose repeat inversely the above-mentioned operations.

Do not clean the hose that goes from the suction motor to the recovery tank.

CLEANING THE SOLUTION TANK AND THE FILTER

Take the machine to the place assigned for the detergent solution draining.

1. Unscrew the detergent solution load tank cap.
2. Close the detergent solution flow valve (1)

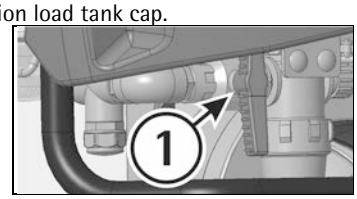

3. Unscrew the filter (2) cap.
4. Open the detergent solution flow valve (1).

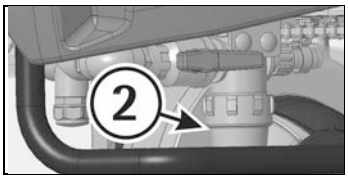

5. Clean the solution tank with a water jet.

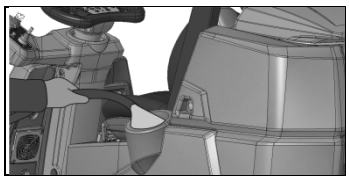

6. Clean the filter components with a water jet
7. Once the parts are cleaned close the filter and the solution tank cap
8. Keep the valve open.
9. It is possible to drain the solution tank also by unscrewing the cap (3).

TWO-MONTHLY MAINTENANCE

FRONT SQUEEGEE RUBBER CHECK

Check the wear of the squeegee rubber and eventually replace it.
For the replacement it is necessary to:
1. Take off the squeegee (see under paragraph "SQUEEGEE CLEANING").
2. Disassemble the rear part of the squeegee (see under paragraph "REAR SQUEEGEE RUBBER CHECK").
3. Unscrew the wing nuts (1) and take off the front rubber holder blade (2).
4. Replace the front rubber (3).

To reassemble the squeegee repeat reverse the operations above mentioned.

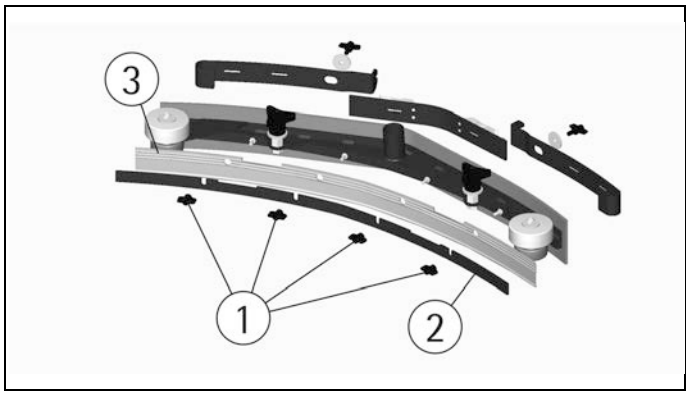

SIX-MONTHLY MAINTENANCE

SPLASH GUARD RUBBER CHECK

With the brushes assembled, the splash guards must slightly touch the floor. If they are worn, they have to be replaced. Just release the lever coupler placed in the rear part of the brushes base group from the ring placed at the free extremity of the metal strip to take off the rubbers and to reinsert the new ones (see under paragraph "SPLASH GUARD ASSEMBLY"). This operation has to be carried out for both splash guards").

TROUBLESHOOTING GUIDE

The checking of all the other foreseen machine operations is left to the authorized technical assistance.

Never leave the batteries completely discharged for a long time.
In case of alarm visualizations contact the technical assistance.

If with the key switch positioned clockwise to switch on the machine the display and other functions are not activated, it is necessary to check the batteries' connection to the machine (see under paragraph "CONNECTION BATTERIES' CONNECTION AND SWITCHING ON OF THE MACHINE"). If the problem persists, please contact the authorized technical assistance.

THE SUCTION MOTOR DOES NOT WORK

1. Check that the emergency system (1) is not activated.

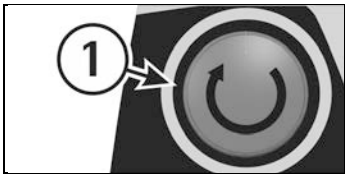

2. Use the key switch to turn off and then on the machine (2).

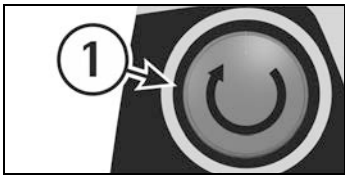

3. Check the battery charge on the display.

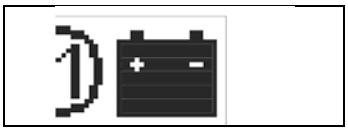

4. Check on the display that the starting signal of the suction motor is on.

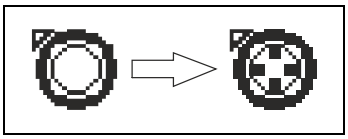

THE BRUSHES MOTOR DOES NOT WORK

1. Check that the emergency system (1) is not activated.

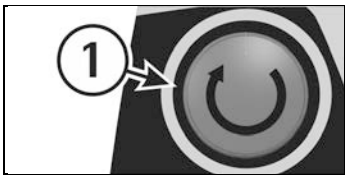

2. Use the key switch to turn off and then on the machine (2).

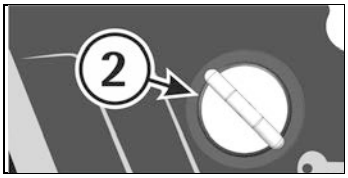

3. Check the battery charge on the display.

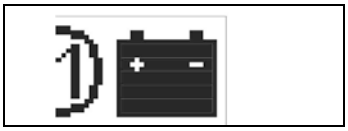

4. Check on the display that the starting signal of the brushes motor is on.

5. Press the pedal on the footboard (3) to start the machine.

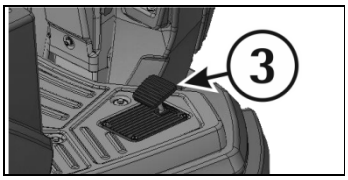

If the problem persists, please contact the authorized technical assistance.

THE TRACTION MOTOR DOES NOT WORK

1. Step on the footboard.
2. Check that the emergency system (1) is not activated.

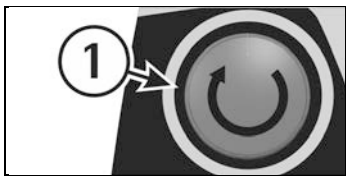

3. Use the key switch to turn off and then on the machine (2).

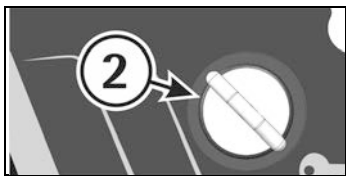

4. Check the lever position (3).

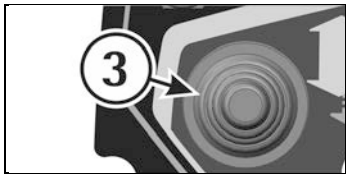

If alarms are showed on the display it is necessary to turn off and the on the machine to restore its functions.

5. Check the battery charge on the display.

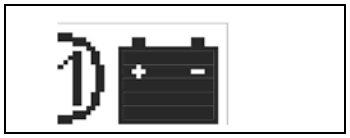

6. Press the pedal on the footboard (4) to start the machine.

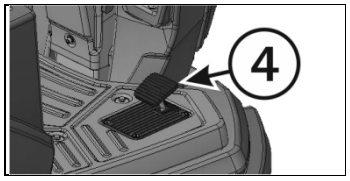

If the problem persists, please contact the authorized technical assistance.

WATER DOES NOT COME DOWN ONTO THE BRUSHES

The machine is equipped with a solenoid valve so to let the solution go down onto the brushes it is necessary to make the brushes turn.

1. Check on the display that the solenoid valve is activated.

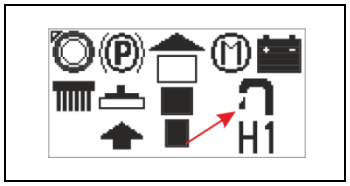

2. Check that the solution filter is clean (see under paragraph "CLEANING THE OUTER SOLUTION FILTER").

If the problem persists, please contact the authorized technical assistance.

THE MACHINE DOES NOT CLEAN PROPERLY

1. The brushes do not have the suitable bristle dimension: contact the authorized technical assistance.
2. The brushes have got worn bristles. Check the brushes wear condition and eventually replace them (the brushes have to be replaced when the bristles have reached a height of about 15mm).
3. To replace the brushes, see instructions under paragraph "AUTOMATIC BRUSHES DISASSEMBLY" and "BRUSHES ASSEMBLY".
4. The detergent solution is insufficient: open more the solution valve (see under paragraph "FLOW RATE SELECTION").
5. Check that the liquid detergent is in the recommended percentage.
6. Increase the brushes base pressure (see under paragraph "ADJUSTMENT OF THE BRUSHES PRESSURE").

Contact the authorized technical assistance for advice.

THE SQUEEGEE DOES NOT DRY PERFECTLY

1. Check that the squeegee rubbers are clean.
2. Check the adjustment of the height and the inclination of the squeegee (see section "ADJUSTMENT OF THE SQUEEGEE" in "BEFORE USE").
3. Check that the suction hose is correctly inserted in the proper seat on the recovery tank or that it is not obstructed.
4. Clean the suction filter.
5. Replace the rubbers if worn out.
6. Check on the display that the starting signal of the suction motor is on.

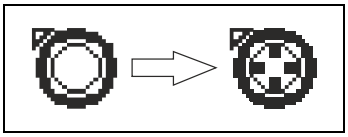

7. Put the motor in standard mode if silenced.

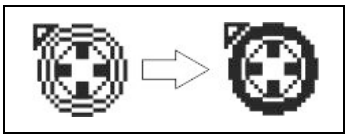

8. Check that the suction motor cap is closed properly.

If the problem persists, please contact the authorized technical assistance.

EXCESSIVE FOAM PRODUCTION

Check that low foam detergent has been used. Eventually add small quantities of anti foam liquid into the recovery tank.
Please be aware that a bigger quantity of foam is produced when the floor is not very dirty. In this case please dilute detergent solution.

PROGRAMMED MAINTENANCE

PERIODIC ORDINARY MAINTENANCE CHART

INTERVENTION	DAILY	PERIODIC
RECOVERY TANK CLEANING	•	
SUCTION FILTER CLEANING	•	
SOLUTION TANK FILTER CLEANING		•
BRUSHES CLEANING	•	
BRUSHES DISASSEMBLY AND CLEANING	•	
SQUEEGEE CLEANING	•	
FRONT SQUEEGEE RUBBER CHECK		•
REAR SQUEEGEE RUBBER CHECK		•
SPLASH GUARD RUBBER CHECK		•
CHECK SQUEEGEE ADJUSTMENT		•
SQUEEGEE HOSE CLEANING		•
SOLUTION TANK CLEANING		•
CHECK BATTERIES ELECTROLYTE		•

FLOORPUL®

FLOORPUL INTERNATIONAL N.V.
GENERAAL DEPREZSTRAAT 10A
B-8530 HARELBEKE

Tel. +32 (0) 56.22.40.44
Fax +32 (0) 56.22.89.74
e-mail: info@floorpul.com
website: www.floorpul.com

FLOORPUL FRANCE SAS:
1 RUE DE L'ORMETEAU
FR-77170 SERVON

Tel. +33 (0) 160.183.122
Fax +33 (0) 160.292.765
e-mail: floorpul@orange.com
website: www.floorpul.com